# VENTICELLO WASHBASIN RECTANGLE

## PRODUCT INFORMATION

| | |
|---|---|
| Article title | Villeroy & Boch Venticello Washbasin, 600 x 505 x 165 mm, Stone White CeramicPlus, with overflow |
| Article number | 412460RW |
| Assembly / Assembly type | wall-mounted |
| Scope of delivery | 1 x washbasin |
| Depth in mm | 505 |
| Width in mm | 600 |
| Height in mm | 165 |
| Interior depth | 120 |
| Collection | Venticello |
| Suitable for | 3-hole mixer, Matching Villeroy&Boch furniture |
| Material | Sanitary ceramics |
| surface | matt |
| Colour name | Stone White CeramicPlus |
| With overflow | Yes |
| Shape | Rectangle |
| Colour designation | Stone White |
| Antibacterial surface (with AntiBac) | No |
| Easy surface cleaning (CeramicPlus) | Yes |
| Number of tap holes punched through | 1 |
| Number of tap holes pre-drilled | 2 |
| Number of bowls | 1 |

## TECHNICAL DRAWINGS

**412460RW**

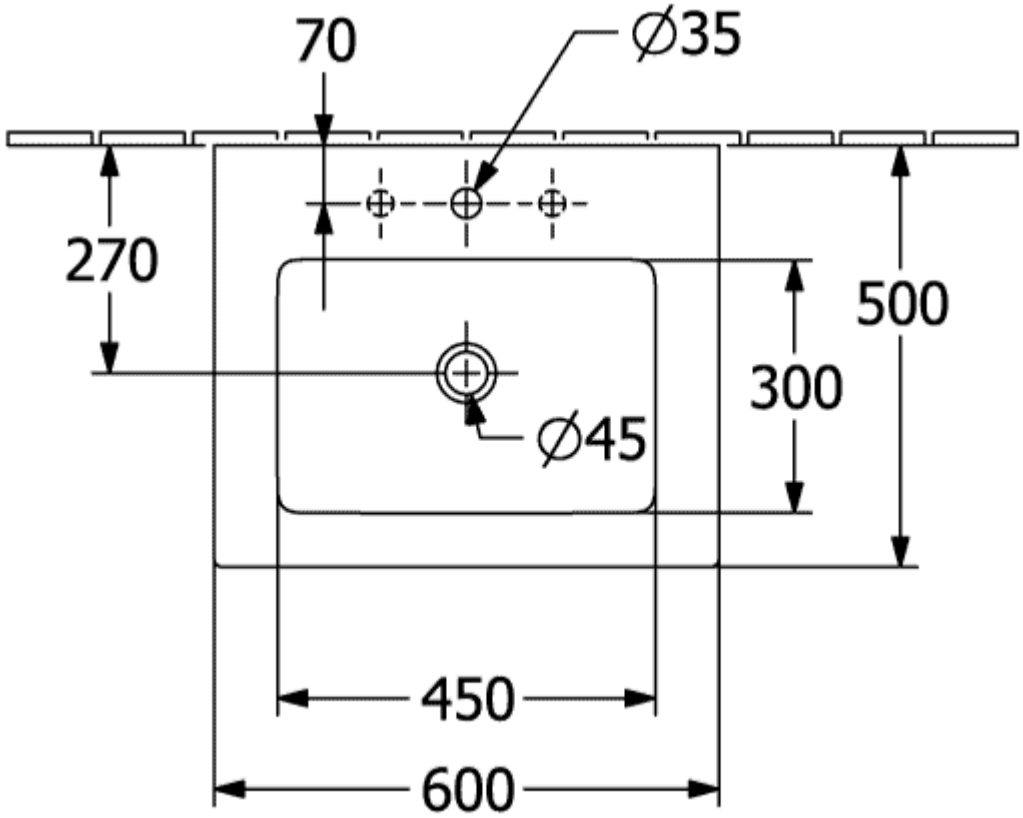

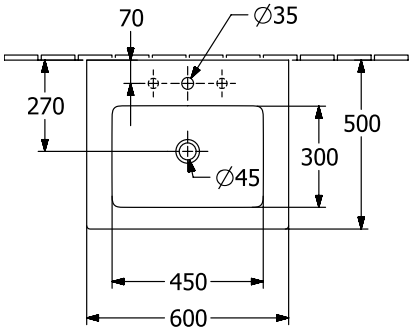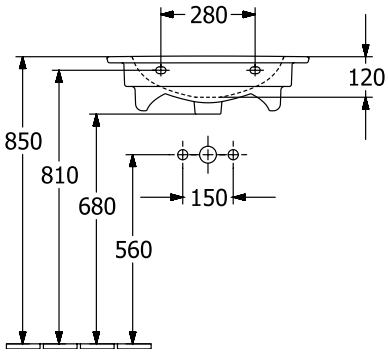
**412460RW**