LOOP & FRIENDS SURFACE-MOUNTED WASHBASIN ROUND

PRODUCT INFORMATION

Article title	Villeroy & Boch Loop & Friends Surface-mounted washbasin, 430 x 430 x 120 mm, White Alpin, without overflow
Article number	51440101
Assembly / Assembly type	Surface-mounted
Scope of delivery	1 x surface-mounted washbasin , 1 x non-closing outlet valve with ceramic valve cover 1 x fastening set 1 x cut-out template
Depth in mm	430
Width in mm	430
Height in mm	120
Interior depth	100
Diameter in mm	430
Collection	Loop & Friends
Tap fitting / Tap hole information	Please note: unclosable outlet valve must be used with models without overflow
Suitable for	Wall-mounted tap fittings, Matching Villeroy&Boch furniture|Tap fitting with raised base
Material	Sanitary ceramics
surface	glossy
Colour name	White Alpin
With overflow	No
Shape	Round
Colour designation	White Alpin
Antibacterial surface (with AntiBac)	No
Easy surface cleaning (CeramicPlus)	No
Underside of washbasin	unground
Number of bowls	1

TECHNICAL DRAWINGS

51440101

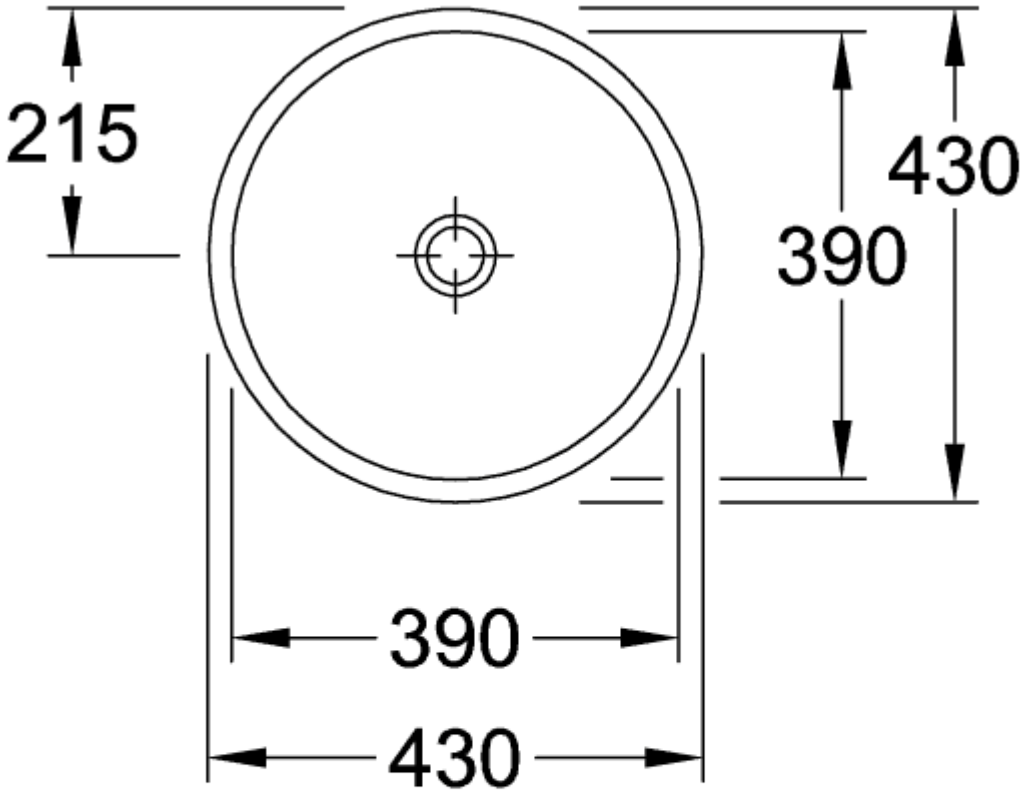

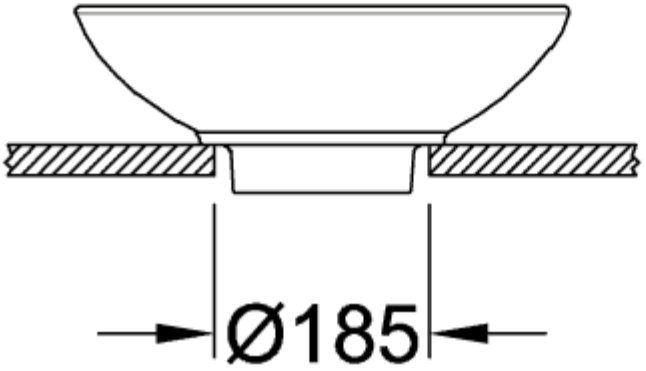

51440101

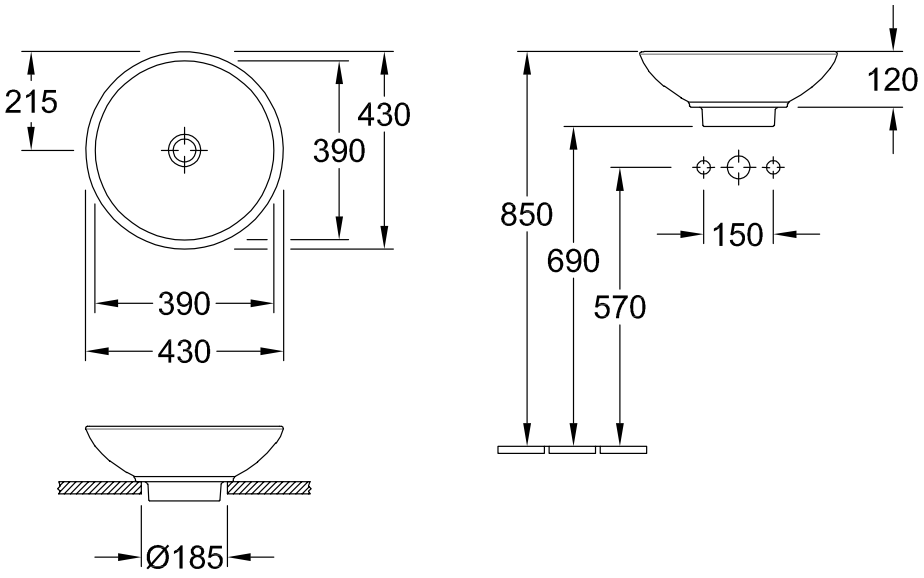

51440101

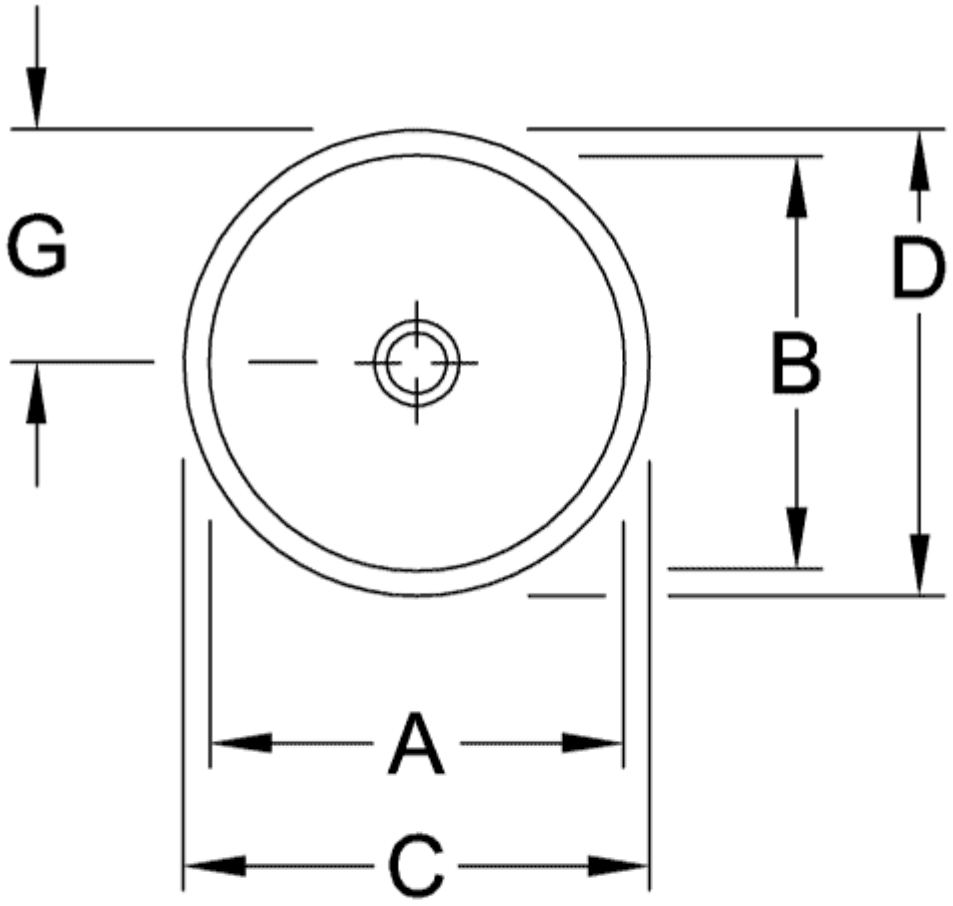

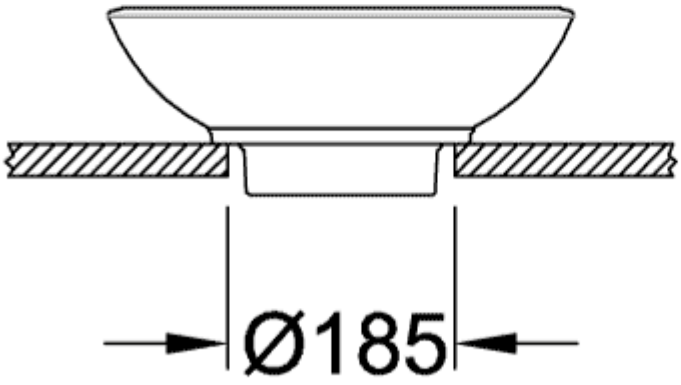

	A	B	C	D	G	H
5148 00	340	340	380	380	190	700
5144 00	390	390	430	430	215	690

51440101

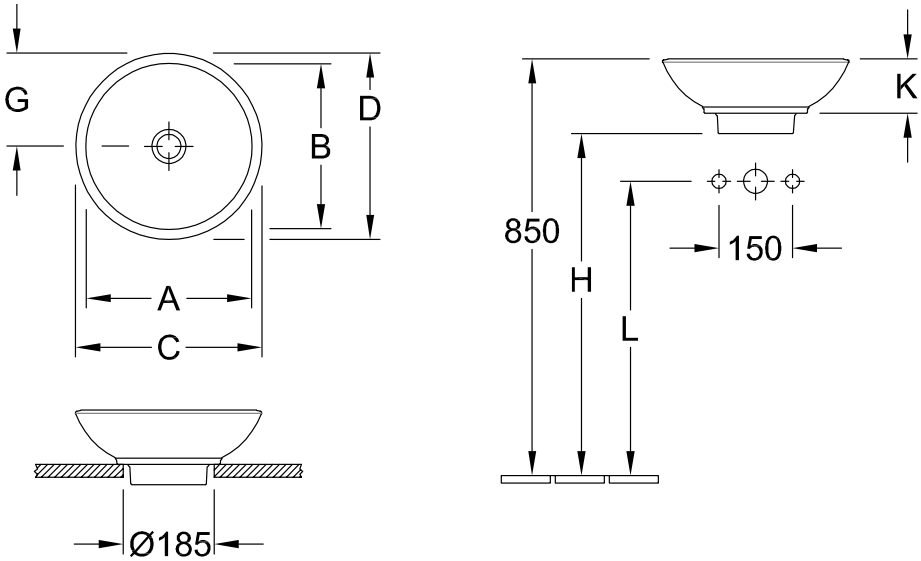

	A	B	C	D	G	H	K	L
5148 00	340	340	380	380	190	700	110	580
5144 00	390	390	430	430	215	690	120	570