O.NOVO HANDWASHBASIN COMPACT OVAL

PRODUCT INFORMATION

Article title	Villeroy & Boch O.novo Handwashbasin Compact, 500 x 400 x 180 mm, White Alpin, without overflow
Article number	53605101
Assembly / Assembly type	wall-mounted
Scope of delivery	1 x handwashbasin
Depth in mm	400
Width in mm	500
Height in mm	180
Interior depth	115
Collection	O.novo
Tap fitting / Tap hole information	Please note: unclosable outlet valve must be used with models without overflow
Suitable for	3-hole mixer
Material	Sanitary ceramics
surface	glossy
Colour name	White Alpin
With overflow	No
Shape	Oval
Colour designation	White Alpin
Antibacterial surface (with AntiBac)	No
Easy surface cleaning (CeramicPlus)	No
Number of tap holes punched through	1
Number of tap holes pre-drilled	2
Number of bowls	1

TECHNICAL DRAWINGS

53605101

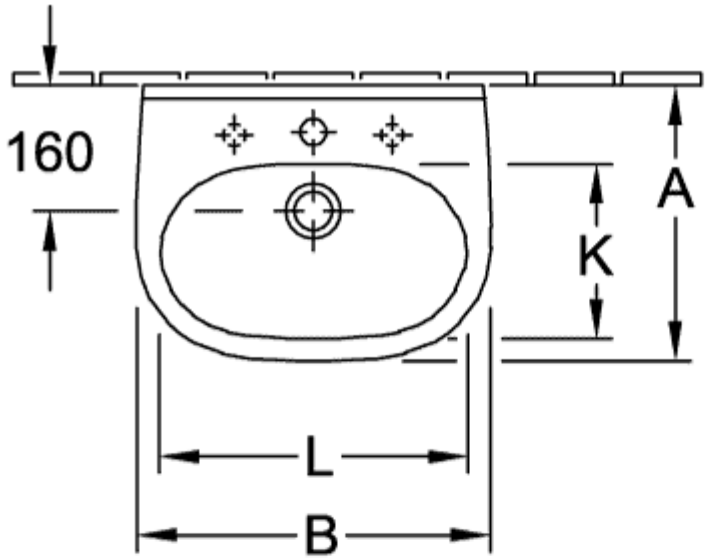

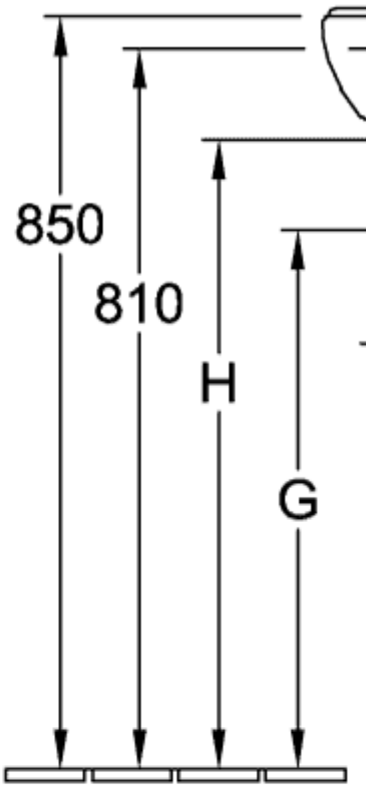

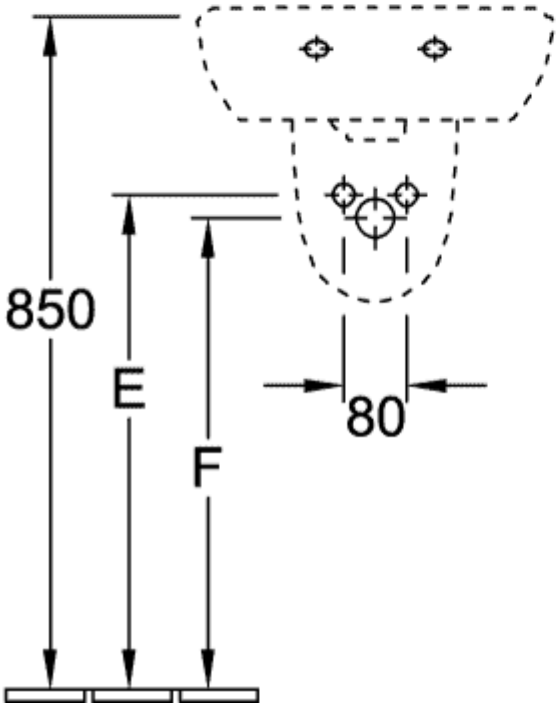

5360 45 / 46 / 47 /
5360 50 / 51 / 52 /

53605101

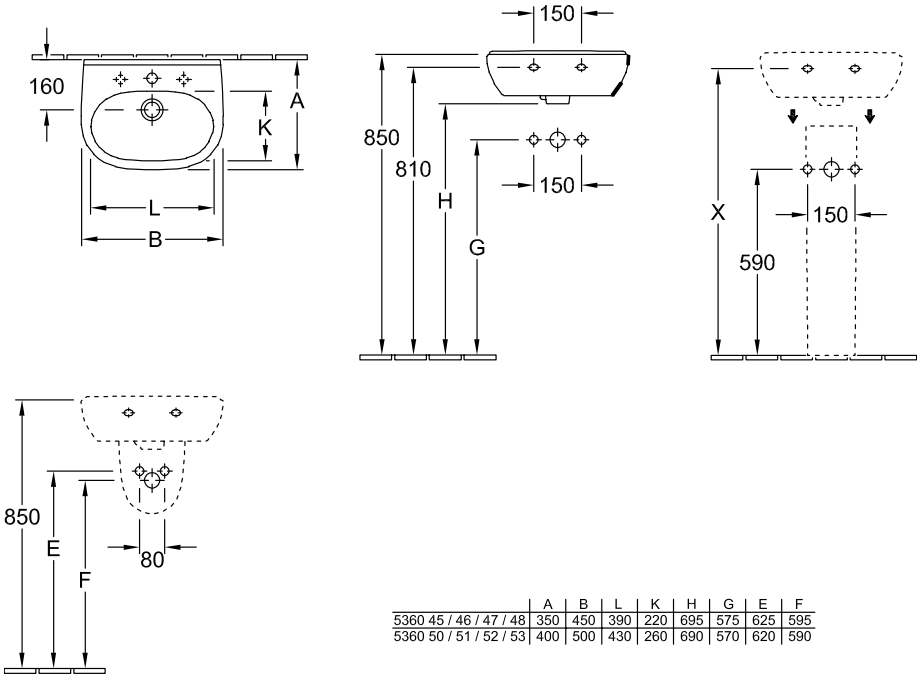

	A	B	L	K	H	G	E	F
5360 45 / 46 / 47 / 48	350	450	390	220	695	575	625	595
5360 50 / 51 / 52 / 53	400	500	430	260	690	570	620	590

53605101

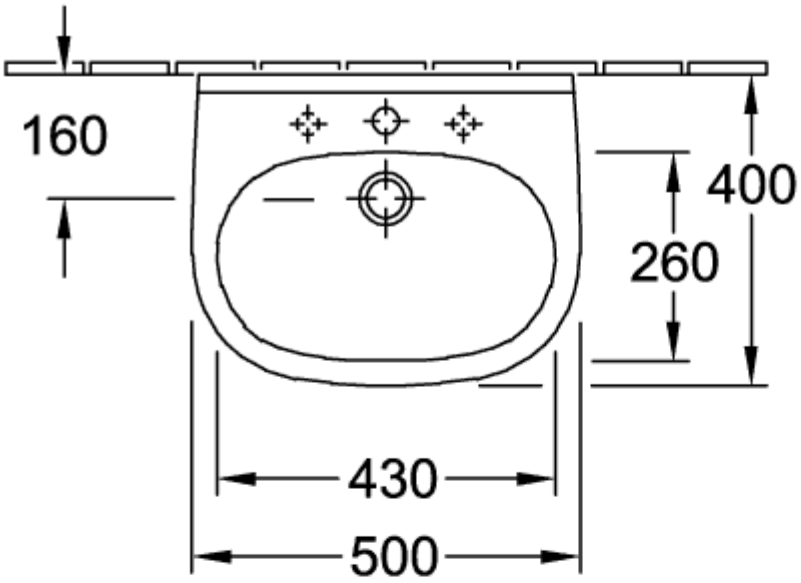

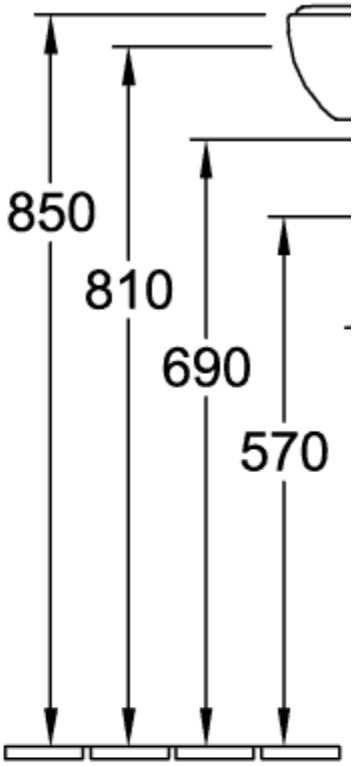

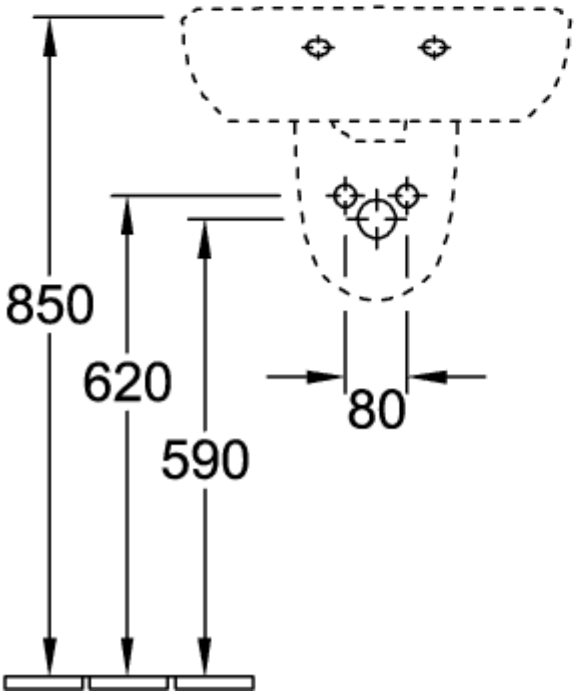

53605101

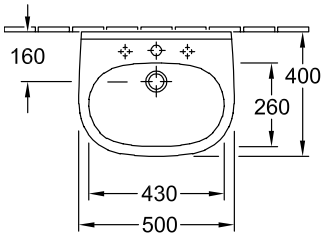
160
400
260
430
500

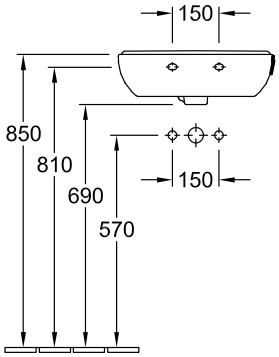
150
850
810
690
570
150

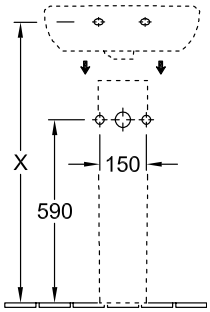
X
150
590

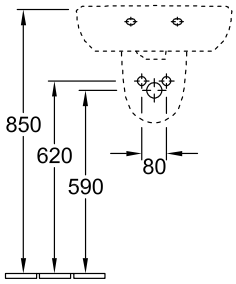
850
620
590
80