O.NOVO CISTERN

PRODUCT INFORMATION

Article title	Villeroy & Boch O.novo Cistern, water inlet from the sides or rear, White Alpin
Article number	5788S101
Scope of delivery	1 x cistern
Depth in mm	147
Width in mm	394
Height in mm	370
Collection	O.novo
Material	Sanitary ceramics
Colour name	White Alpin
Other material	Push button: ABS Flushing mechanism: Plastic
Other surfaces	Push button: chrome, glossy, Flushing mechanism: glossy
Colour designation	White Alpin
Other colour designations	Push button: Chrome, Flushing mechanism: White Alpin

TECHNICAL DRAWINGS

5788S101

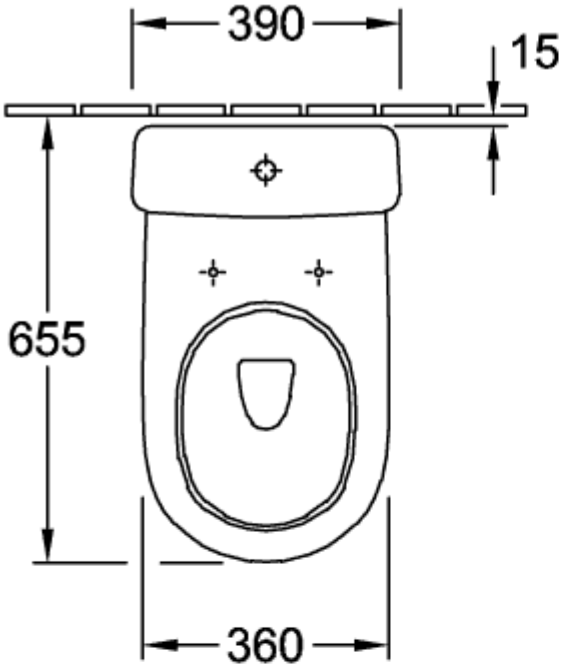

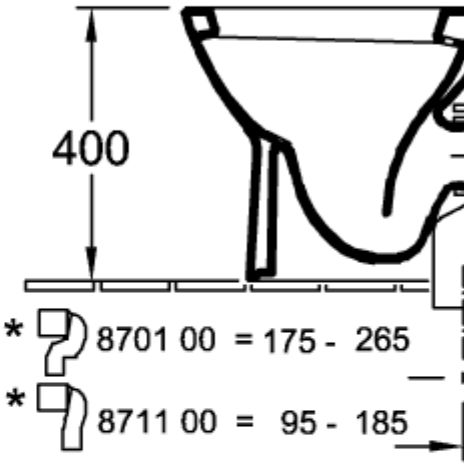

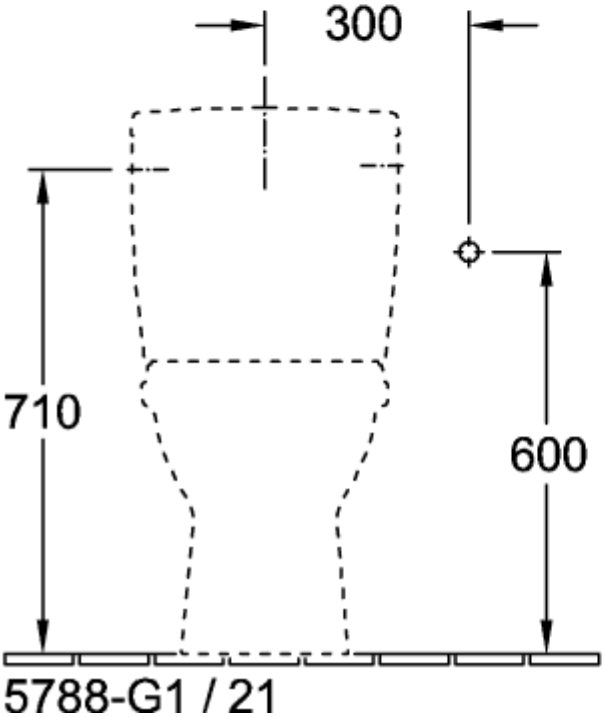

5788S101

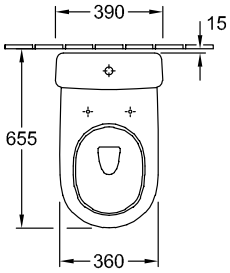
390
15
655
360

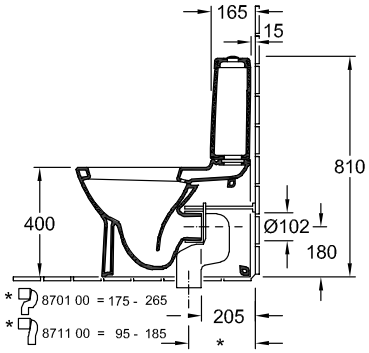
165
15
810
400
Ø102
180
205
*
* 8701 00 = 175 - 265
* 8711 00 = 95 - 185

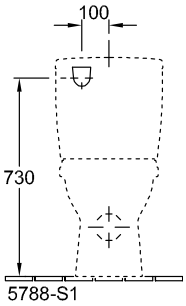
100
730
5788-S1

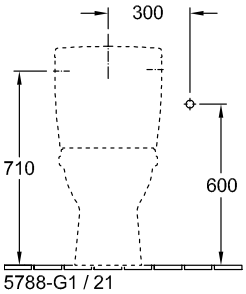
300
710
600
5788-G1 / 21

5788S101

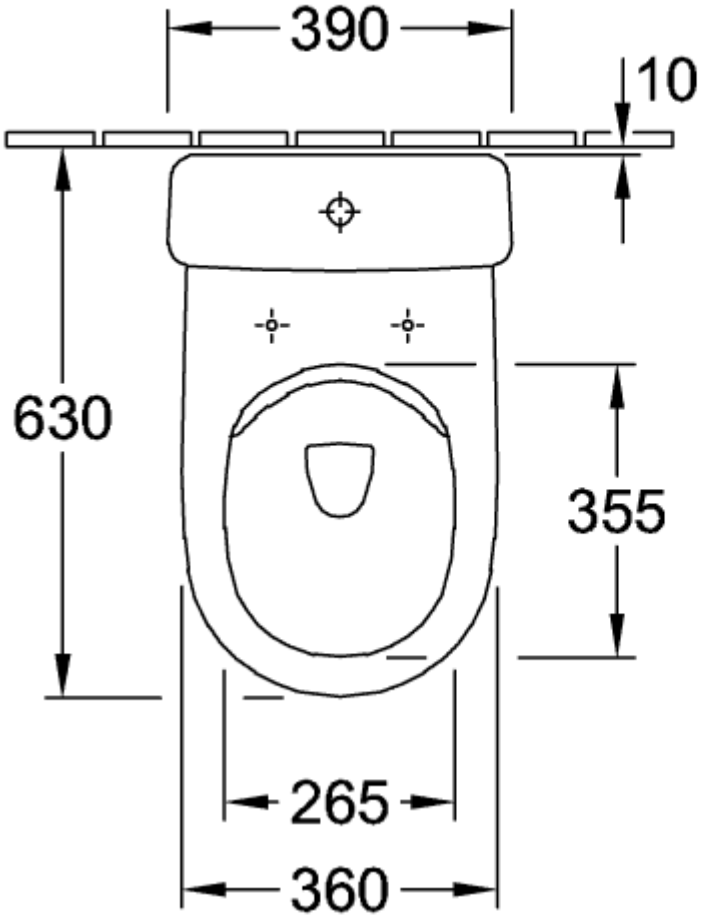

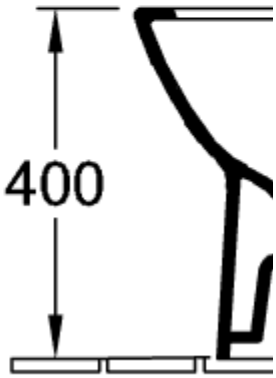

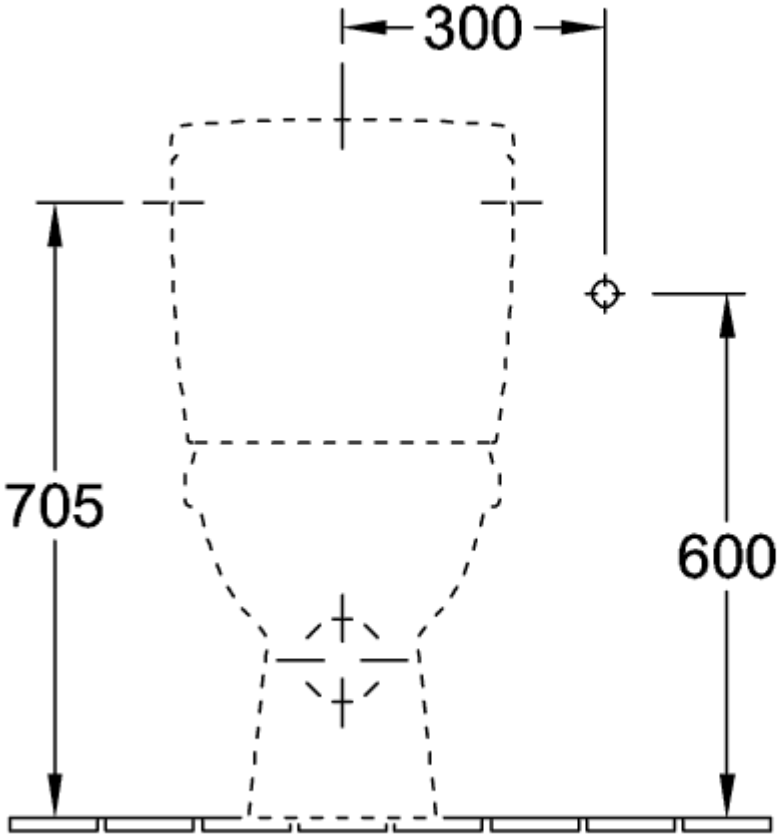

5788-G1 / 21

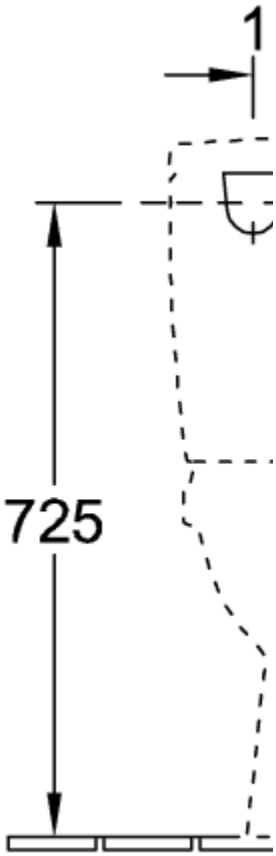

5788-S1

5788S101

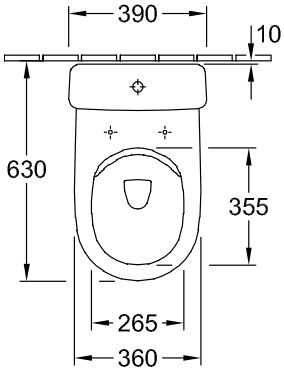

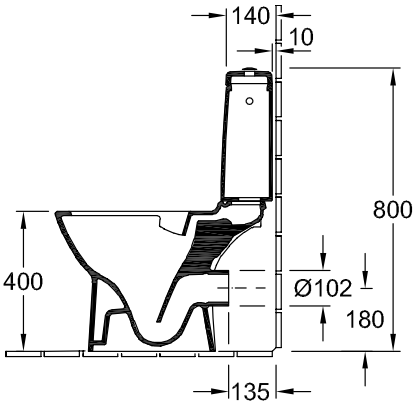

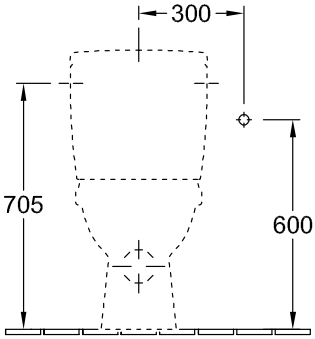

5788-G1 / 21

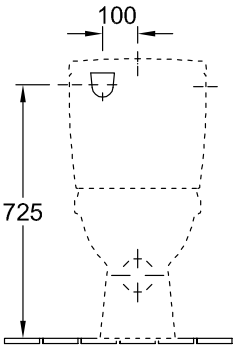

5788-S1

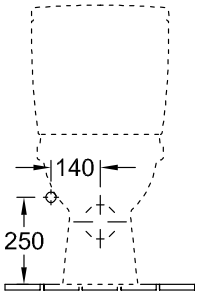

5788-R1

5788S101

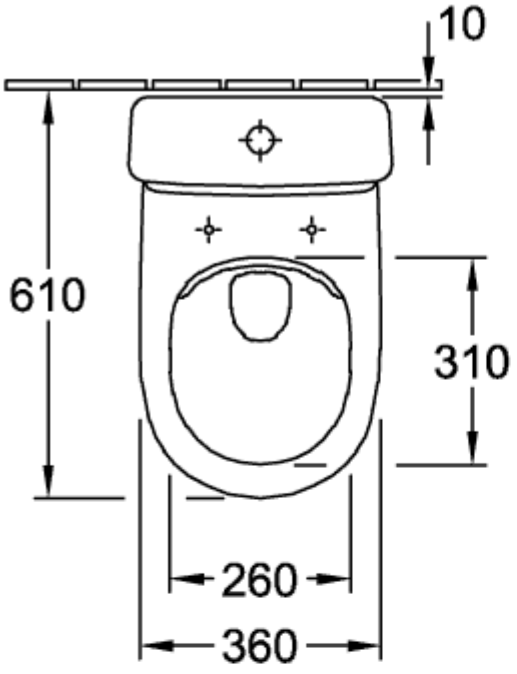
10
610
310
260
360

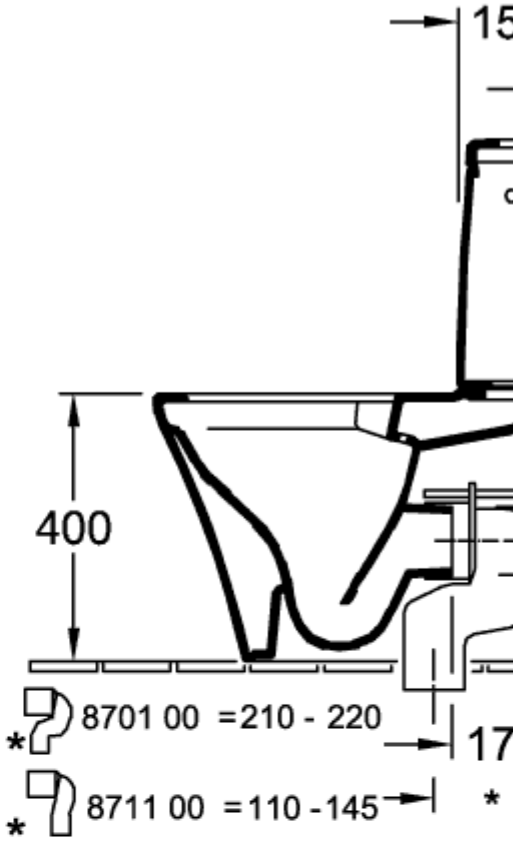
15
400
8701 00 =210 - 220
17
8711 00 =110 -145

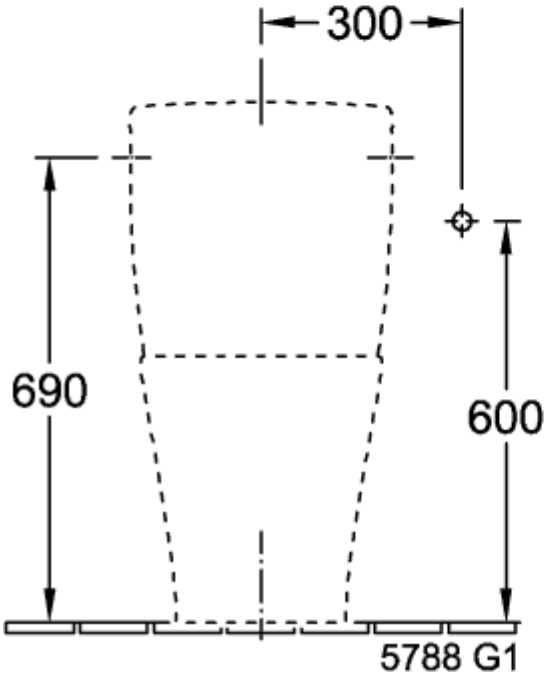
300
690
600
5788 G1

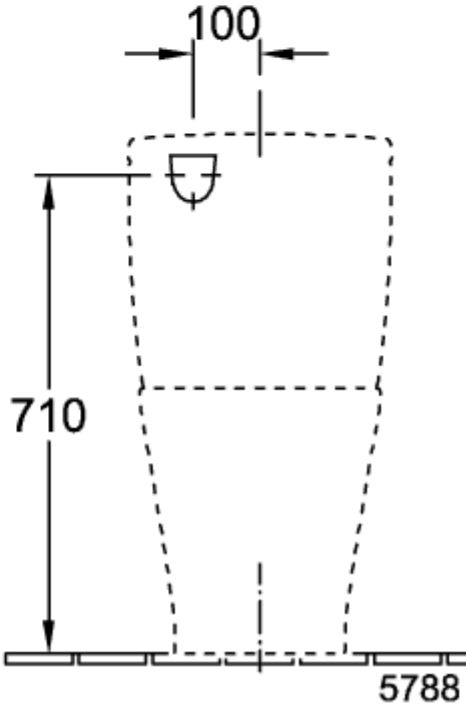
100
710
5788

5788S101

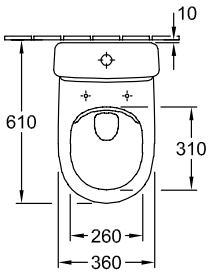
10
610
310
260
360

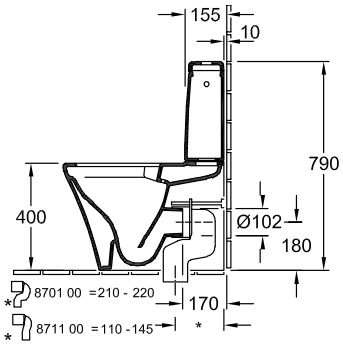
155
10
790
400
Ø102
180
8701 00 =210 - 220
170
8711 00 =110 -145
*

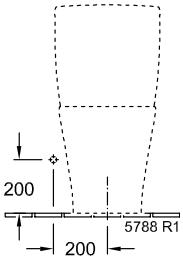
200
200
5788 R1

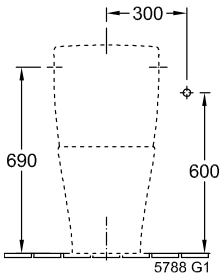
300
690
600
5788 G1

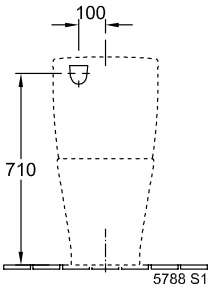
100
710
5788 S1

5788S101

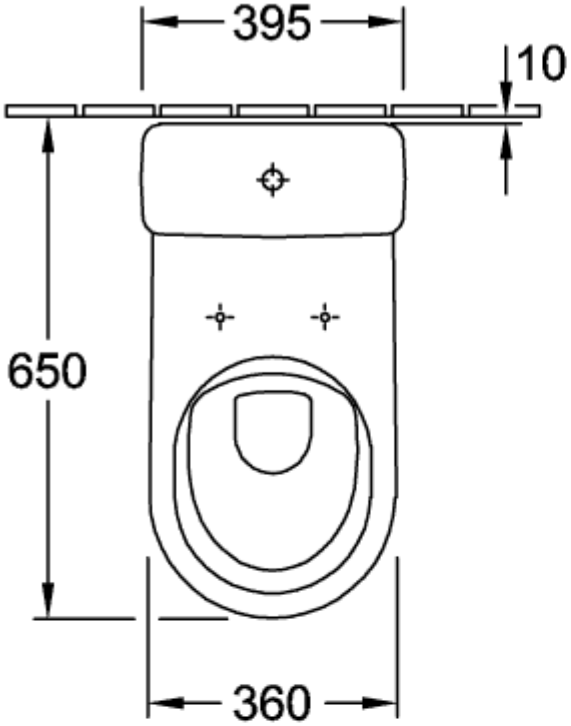

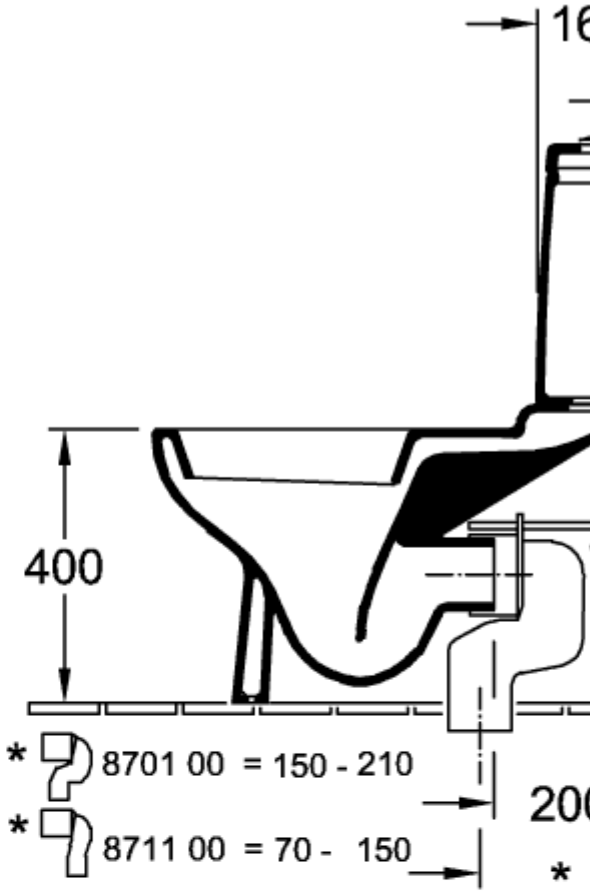

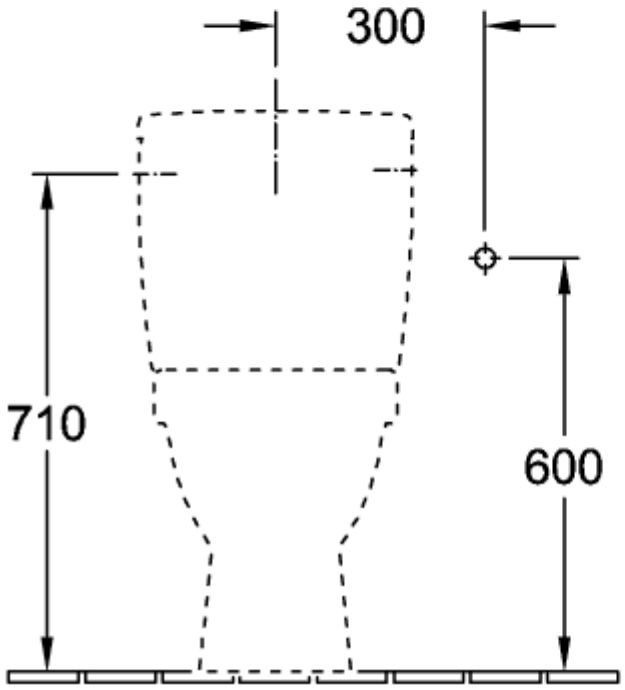

5788-1G

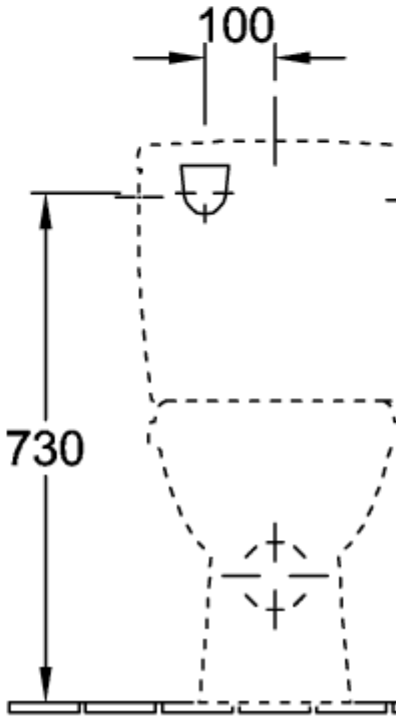

5788-S1

5788S101

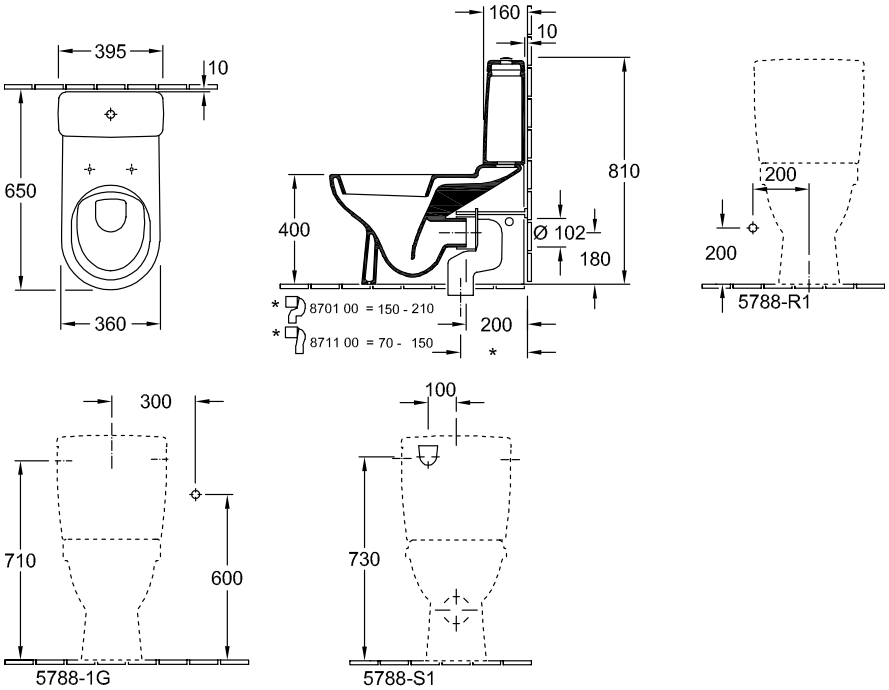
395
10
650
360
160
10
810
400
Ø 102
180
200
* 8701 00 = 150 - 210
* 8711 00 = 70 - 150
*
200
200
5788-R1
300
710
600
5788-1G
100
730
5788-S1