O.NOVO WASHDOWN TOILET FOR CLOSE-COUPLED WC-SUITE OVAL

PRODUCT INFORMATION

Article title	Villeroy & Boch O.novo Washdown toilet for close-coupled WC-suite, wall-mounted, White Alpin CeramicPlus
Article number	662310R1
Assembly / Assembly type	wall-mounted
Scope of delivery	1 x washdown toilet
Depth in mm	680
Width in mm	355
Height in mm	396
Collection	O.novo
Suitable for	Mounted cistern
Innovative flushing technology (with TwistFlush)	No
Flush volume l	3 / 6 l
Wall-mounted - floor-standing	wall-mounted
Material	Sanitary ceramics
surface	glossy
Colour name	White Alpin CeramicPlus
Shape	Oval
Colour designation	White Alpin
Antibacterial surface (with AntiBac)	No
Easy surface cleaning (CeramicPlus)	Yes
Rimless (mit DirectFlush)	No
Flush type	Washdown toilet
Integrated freshness solution (with ViFresh)	No
Outlet / outlet	horizontal outlet

TECHNICAL DRAWINGS

662310R1

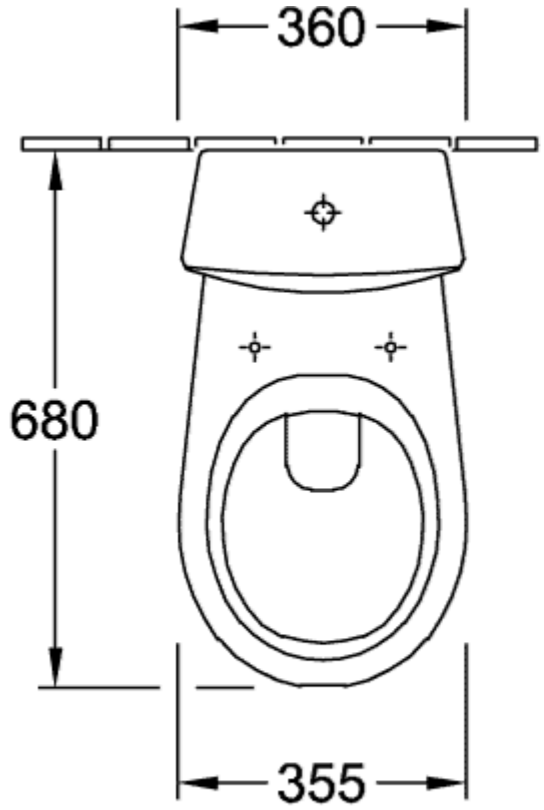
360
680
355

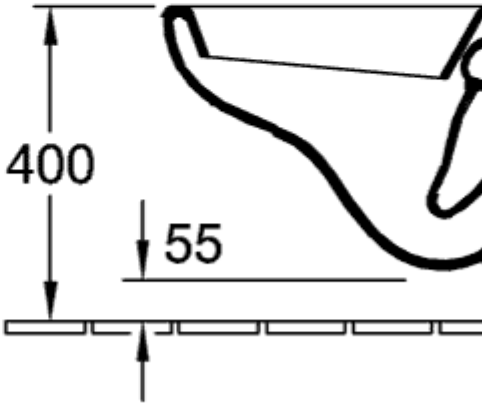
400
55

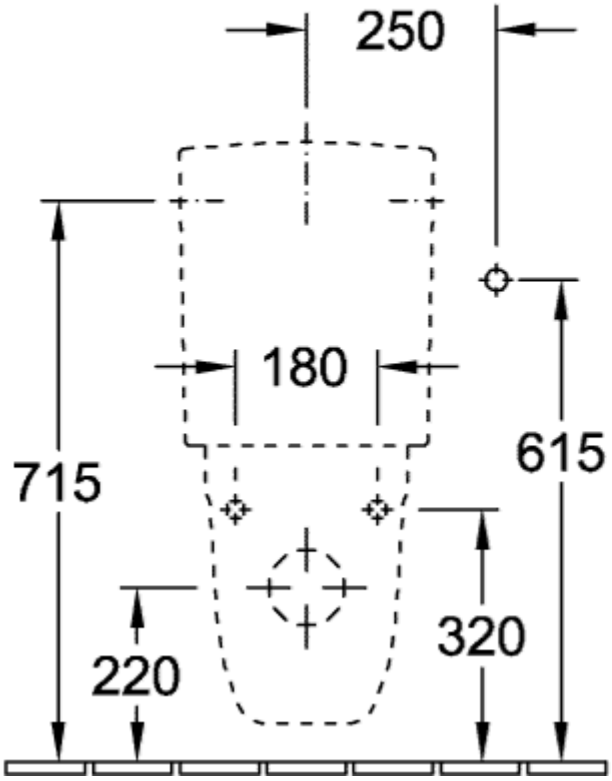
250
180
715
615
220
320

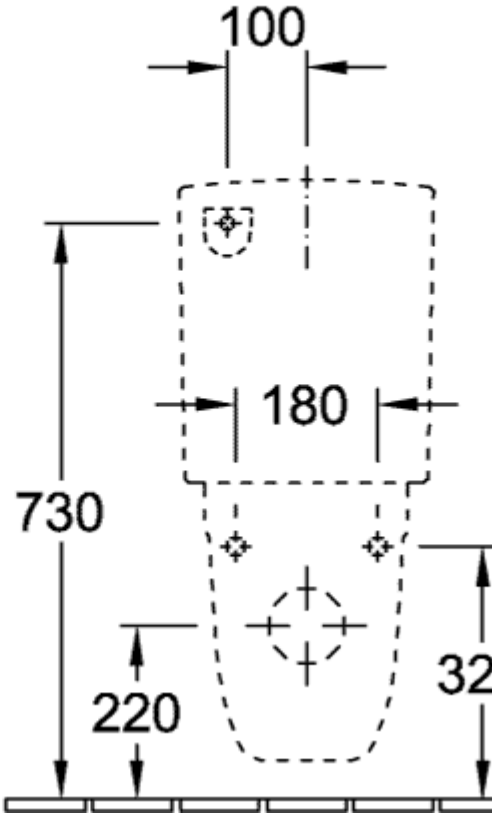
100
180
730
220
32

662310R1

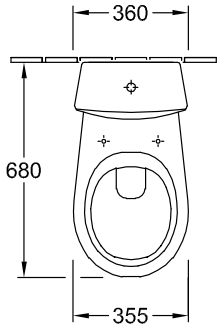
360
680
355

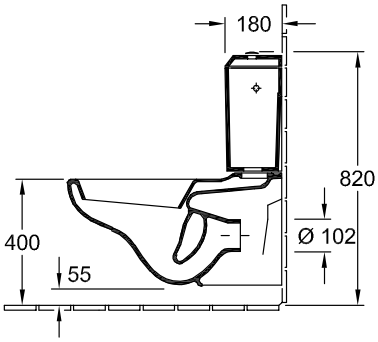
180
820
400
Ø 102
55

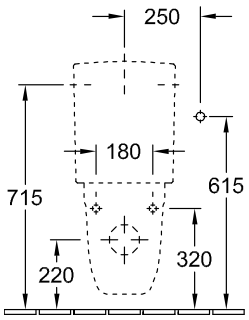
250
180
715
615
220
320

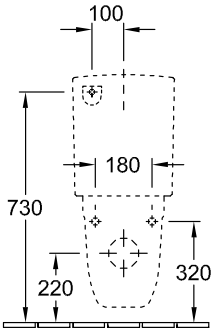
100
180
730
220
320

662310R1

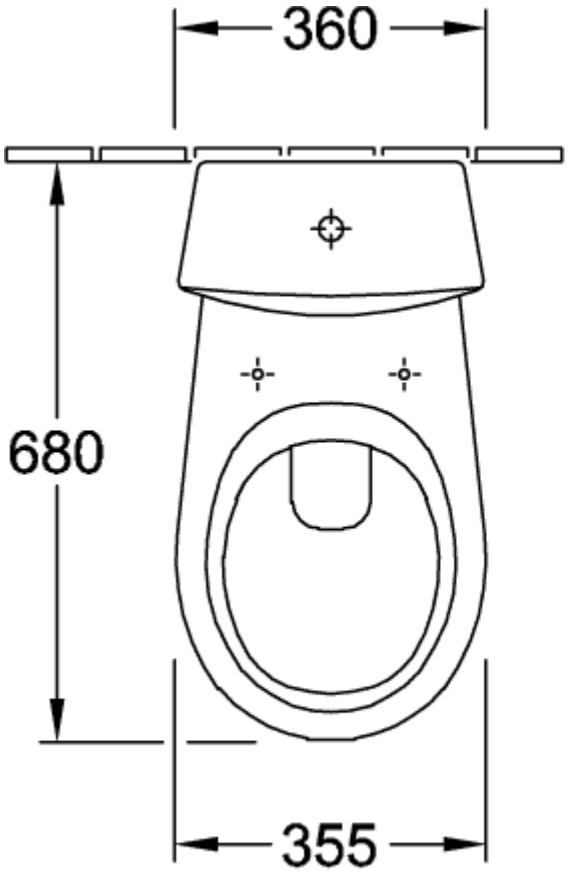
360
680
355

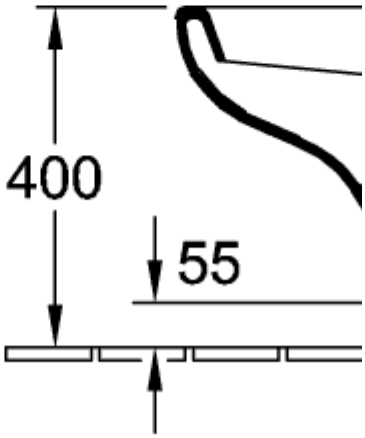
400
55

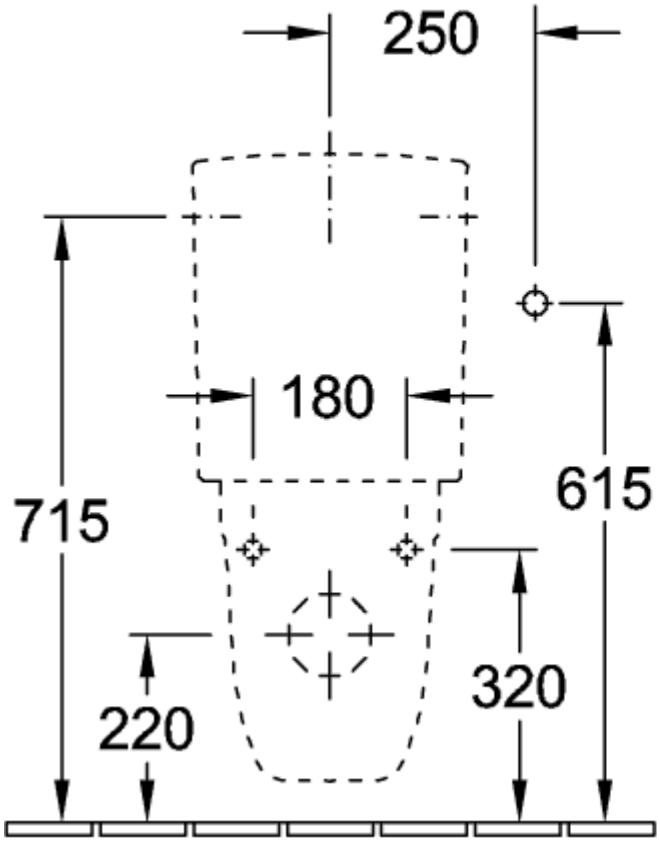
250
180
715
615
220
320

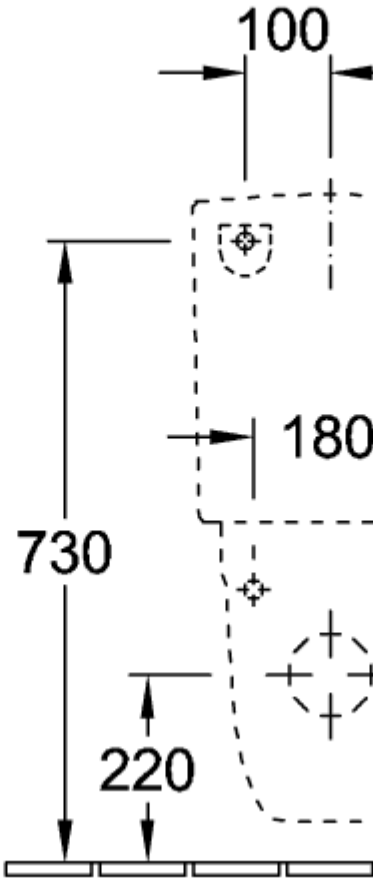
100
180
730
220

662310R1

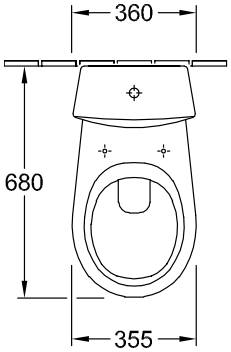
360
680
355

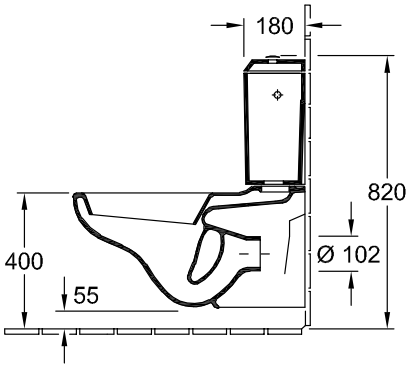
180
820
400
Ø 102
55

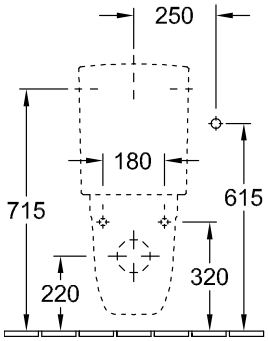
250
180
715
615
220
320

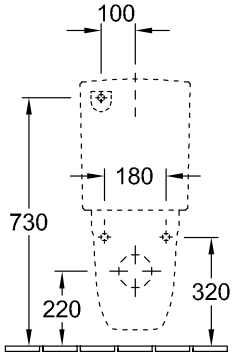
100
180
730
220
320