# MORE TO SEE MIRROR RECTANGLE

## PRODUCT INFORMATION

| | |
|---|---|
| Article title | Villeroy & Boch More To See Mirror, with lighting, 650 x 750 x 126 mm |
| Article number | A4046500 |
| Assembly / Assembly type | wall-mounted |
| Equipment | 1 x lamp |
| Scope of delivery | 1 x mirror , 1 x fastening set |
| Depth in mm | 126 |
| Width in mm | 650 |
| Height in mm | 750 |
| Collection | More To See |
| Function | with lighting |
| Material | Glass |
| Shape | Rectangle |
| With lighting | Yes |
| Smart home compatible | No |

## TECHNICAL DRAWINGS

**A4046500**

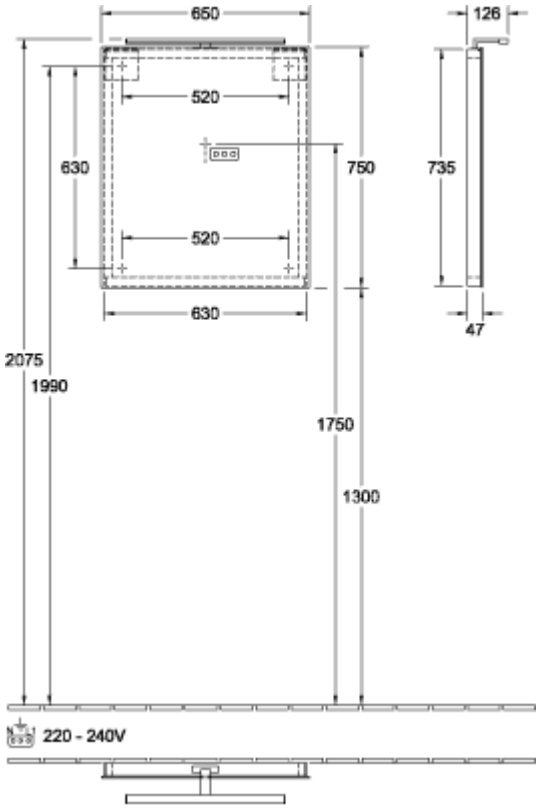

## A4046500

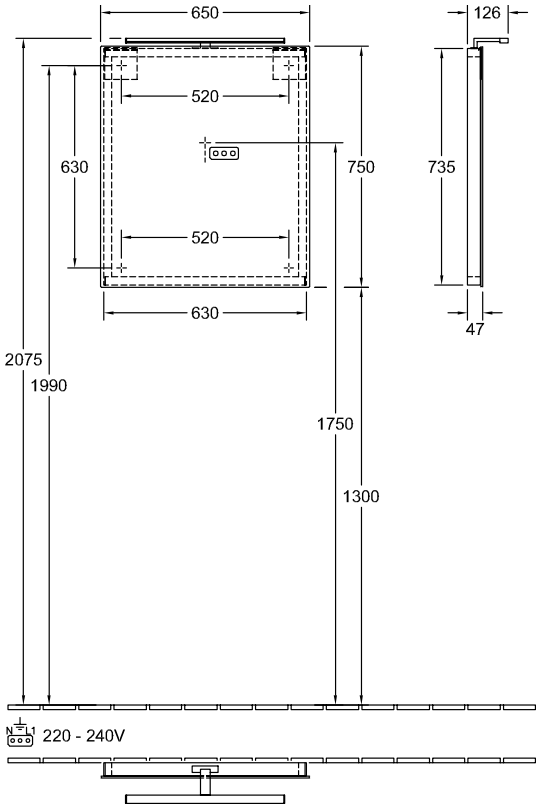
650
126
520
630
750
735
520
630
47
2075
1990
1750
1300
N
L1
220 - 240V