NEXUS OVAL BATH OVAL

PRODUCT INFORMATION

Article title	Villeroy & Boch Nexus Oval bath, 1771 x 771 mm, White Alpin
Article number	UBQ180NEU7V-01
Assembly / Assembly type	built-in installation
Scope of delivery	1 x oval bath , 2 x bath support frame (self-adhesive), adjustable from 130 - 180 mm
Length in mm	1771
Width in mm	771
Height in mm	475
Interior depth	450
Collection	Nexus
Material	Quaryl®
Colour name	White Alpin
With overflow	Yes
Number of people	2
Shape	Oval
Colour designation	White Alpin
With slip resistance	No
Outlet / outlet	central outlet
Interior form	oval
SilentFlow	No

TECHNICAL DRAWINGS

UBQ180NEU7V-01

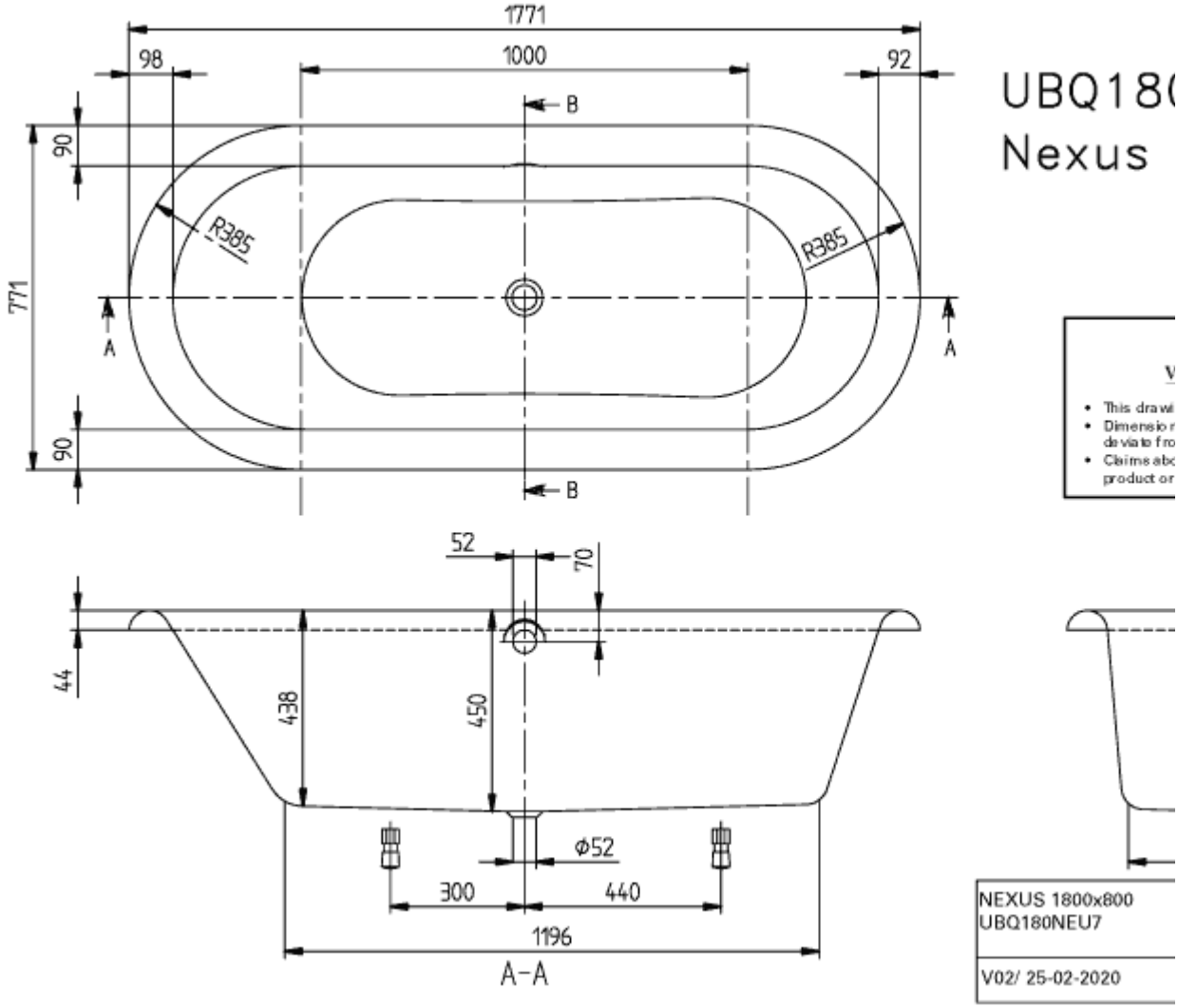
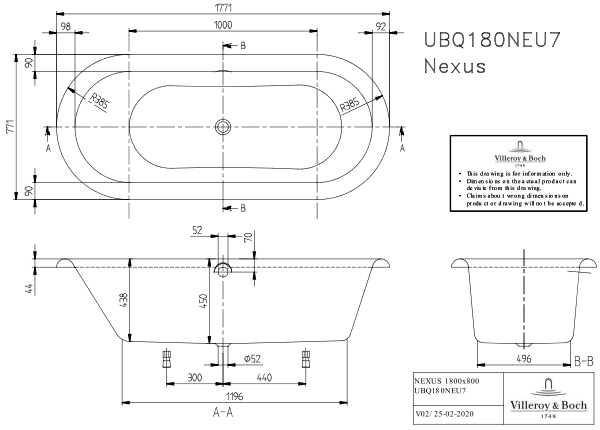
UBQ180NEU7V-01