ARCHITECTURA SQUARE SHOWER TRAY SQUARE

PRODUCT INFORMATION

Article title	Villeroy & Boch Architectura Square shower tray, 800 x 800 x 15 mm, anthracite
Article number	UDA8080ARA115V-1S
Assembly / Assembly type	Surface-mounted, Corner installation|flush-fitting installation| Installation on a base
Assembly instructions	With MetalRim and an edge height of 15mm, we recommend the use of a composite seal in accordance with ETAG 022 on the floor structure below the shower tray in order to prevent any moisture from penetrating the floor structure., The installation height of the shower tray can be reduced by 30 mm if the Viega outlet fitting art. no. 634 100 is used. Please note: this outlet fitting does not conform to EN 274.
Scope of delivery	1 x square shower tray , 1 x outlet cover in White Alpine (01), for matt colours, outlet cover in matching matt colours.
Length in mm	800
Width in mm	800
Height in mm	15
Interior depth	15
Collection	Architectura
Material	Acrylic
Colour name	anthracite
Other material	Outlet cover: Acrylic
Other surfaces	Outlet cover: matt
Shape	Square
Colour designation	anthracite
Other colour designations	Outlet cover: anthracite
Antibacterial surface (with AntiBac)	No
Easy surface cleaning (CeramicPlus)	No
With slip resistance	No

TECHNICAL DRAWINGS

UDA8080ARA115V-1S

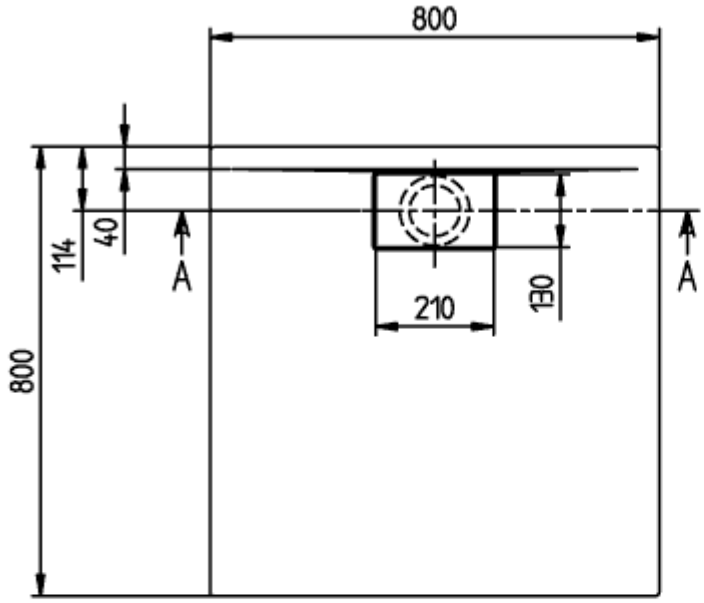

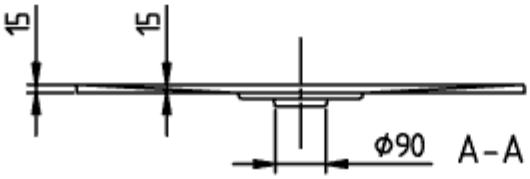

ARCHITECTURA METAL
RIM 800x800
UDA8080ARA115

V02 / 31-03-2021

Villeroy

UDA8080ARA115V-1S

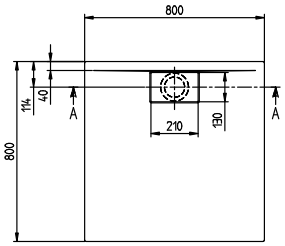

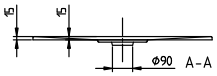

ARCHITECTURA METAL RIM 800x800 UDA8080ARA115	Villeroy & Boch 1748
V02 / 31-03-2021	