SUBWAY 60 XL FLAT FLUSH-MOUNTED SINK RECTANGLE

PRODUCT INFORMATION

Article title	Villeroy & Boch Subway 60 XL flat Flush-mounted sink, included Waste system pop-up, of Ceramic, 965 x 475 mm, Snow White CeramicPlus
Article number	67192FKG
Assembly / Assembly type	flush-fitting installation
Assembly instructions	minimum unit width: 60 cm, For flush-fit installation in natural stone or artificial stone countertops| Minimum thickness of the countertop when placed with a dishwasher: at least 4 cm
Scope of delivery	1 x sink , 1 x pop-up waste system 1 x cover cap, round
Length in mm	475
Width in mm	965
Height in mm	220
Interior depth	200
Collection	Subway 60 XL flat
Material	Ceramic
Colour name	Snow White CeramicPlus
Other material	Grate: Stainless steel Valve: Stainless steel
Position of main bowl	Basin on right
Function of the drain fitting	pop-up waste system
Colour designation	Snow White
Other colour designations	Grate: Chrome, Valve: Chrome

TECHNICAL DRAWINGS

67192FKG

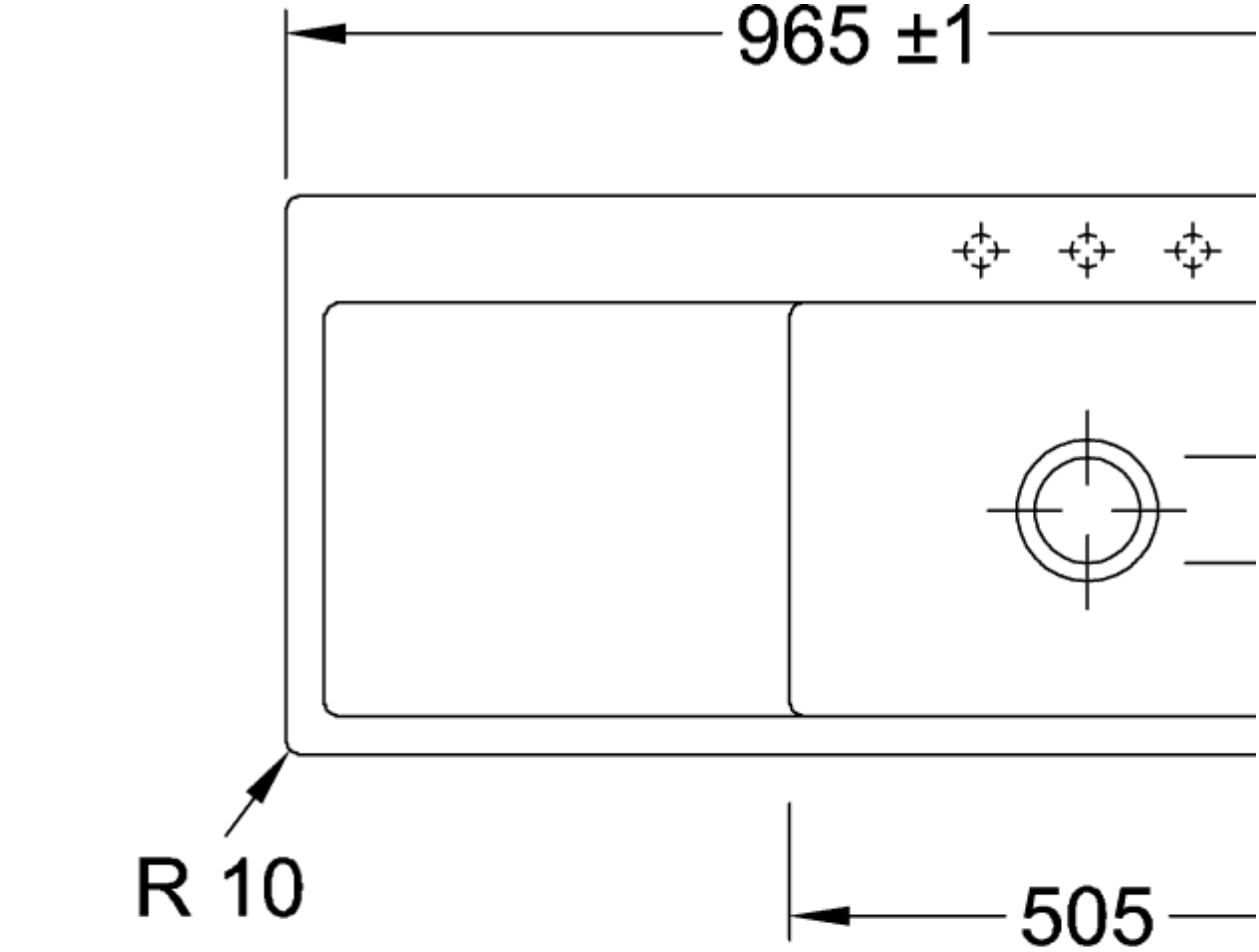

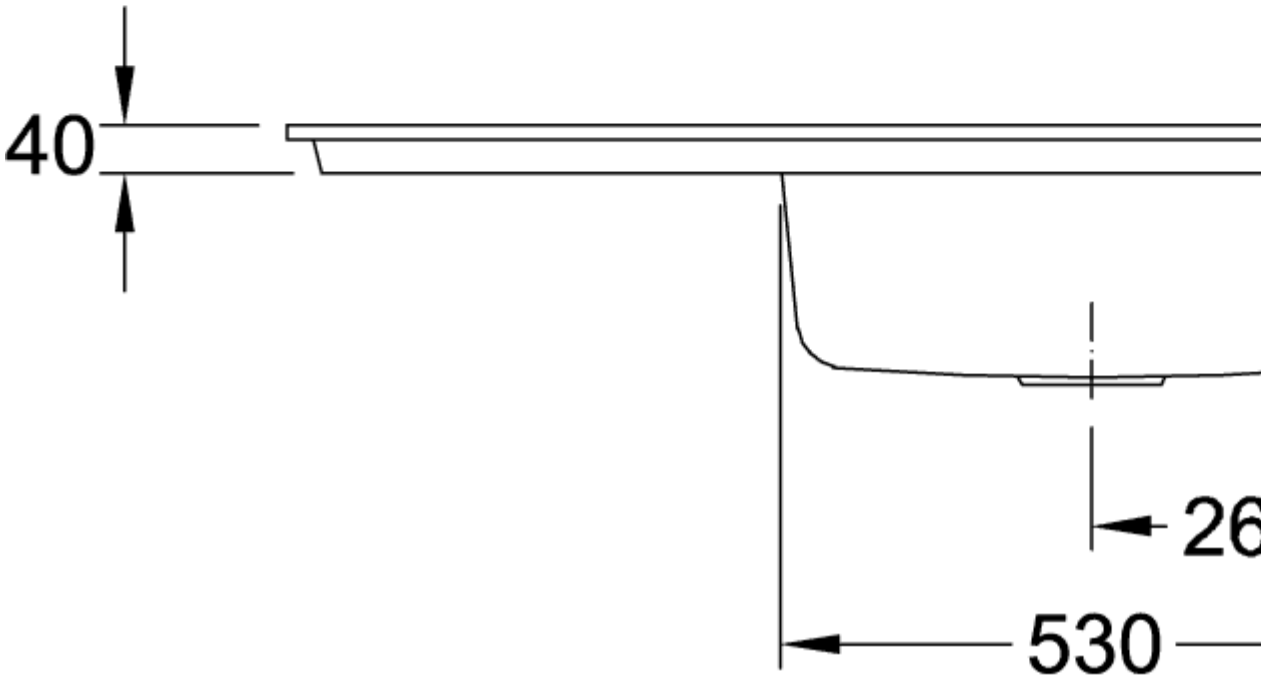
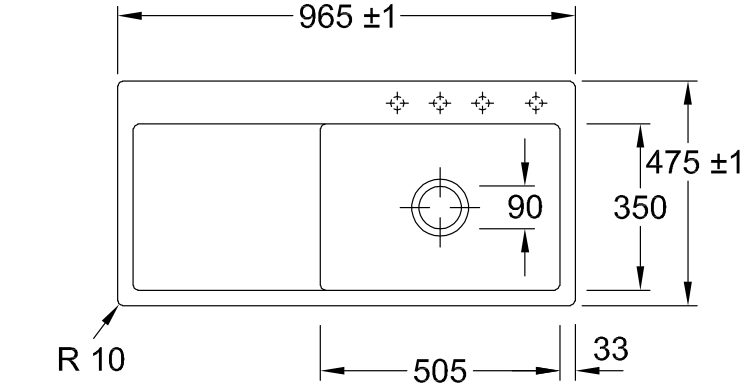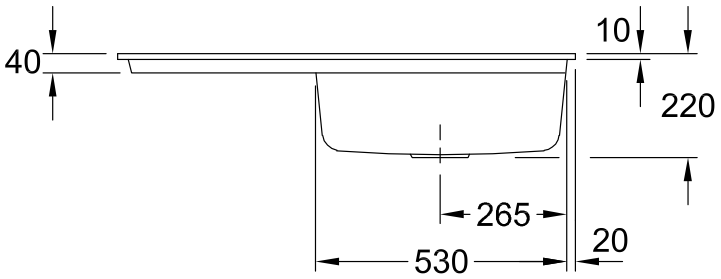
67192FKG