MONUMENTUM CORNER ELEMENT CORNER

PRODUCT INFORMATION

Article title	Villeroy & Boch Monumentum Corner element, included Waste system hand-operated, Fastening set, of Ceramic, 896 x 896 mm, White Alpin CeramicPlus
Article number	330301R1
Assembly / Assembly type	surface-mounted installation
Assembly instructions	Installation on a corner undersink cabinet with 90 cm side length.
Scope of delivery	1 x sink , 1 x basket strainer waste 1 x fastening set
Length in mm	896
Width in mm	896
Height in mm	220
Interior depth	200
Collection	Monumentum
Material	Ceramic
Colour name	White Alpin CeramicPlus
Other material	Grate: Stainless steel Valve: Stainless steel
Position of main bowl	Basin centred
Function of the drain fitting	basket strainer waste
Colour designation	White Alpin
Other colour designations	Grate: Chrome, Valve: Chrome

TECHNICAL DRAWINGS

330301R1

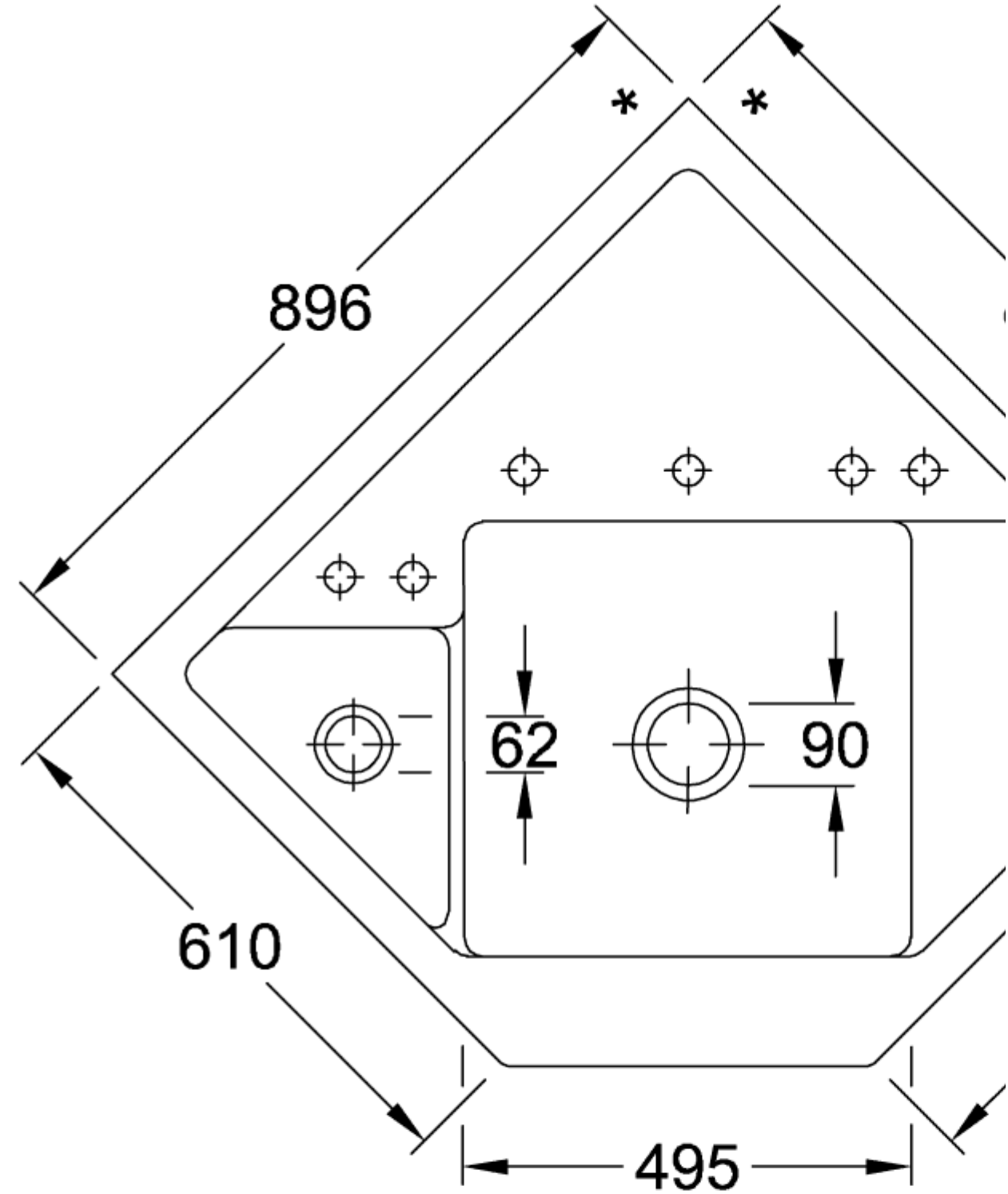
*
*
896
62
90
610
495

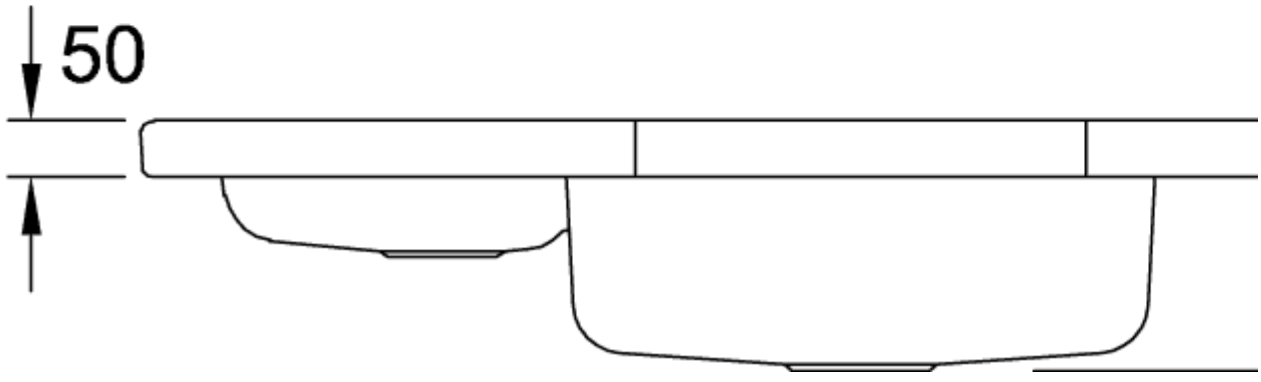
50
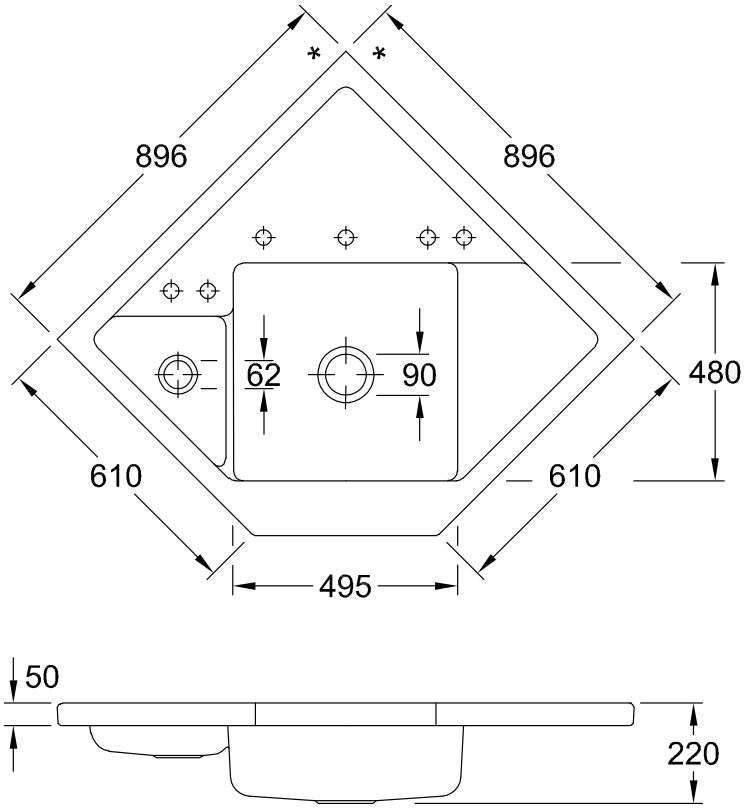
330301R1