# SUBWAY STYLE 60 FLAT FLUSH-MOUNTED SINK RECTANGLE

## PRODUCT INFORMATION

| | |
|---|---|
| Article title | Villeroy & Boch Subway Style 60 Flat Flush-mounted sink, included Waste system hand-operated, of Ceramic, 980 x 490 mm, White Alpin CeramicPlus |
| Article number | 33611FR1 |
| Assembly / Assembly type | flush-fitting installation |
| Assembly instructions | minimum unit width: 60 cm |
| Scope of delivery | 1 x sink , 1 x basket strainer waste |
| Length in mm | 490 |
| Width in mm | 980 |
| Height in mm | 220 |
| Interior depth | 200 |
| Collection | Subway Style 60 Flat |
| Material | Ceramic |
| Colour name | White Alpin CeramicPlus |
| Other material | Grate: Stainless steel Valve: Stainless steel |
| Position of main bowl | Basin on right |
| Function of the drain fitting | basket strainer waste |
| Colour designation | White Alpin |
| Other colour designations | Grate: Chrome, Valve: Chrome |

# TECHNICAL DRAWINGS

**33611FR1**

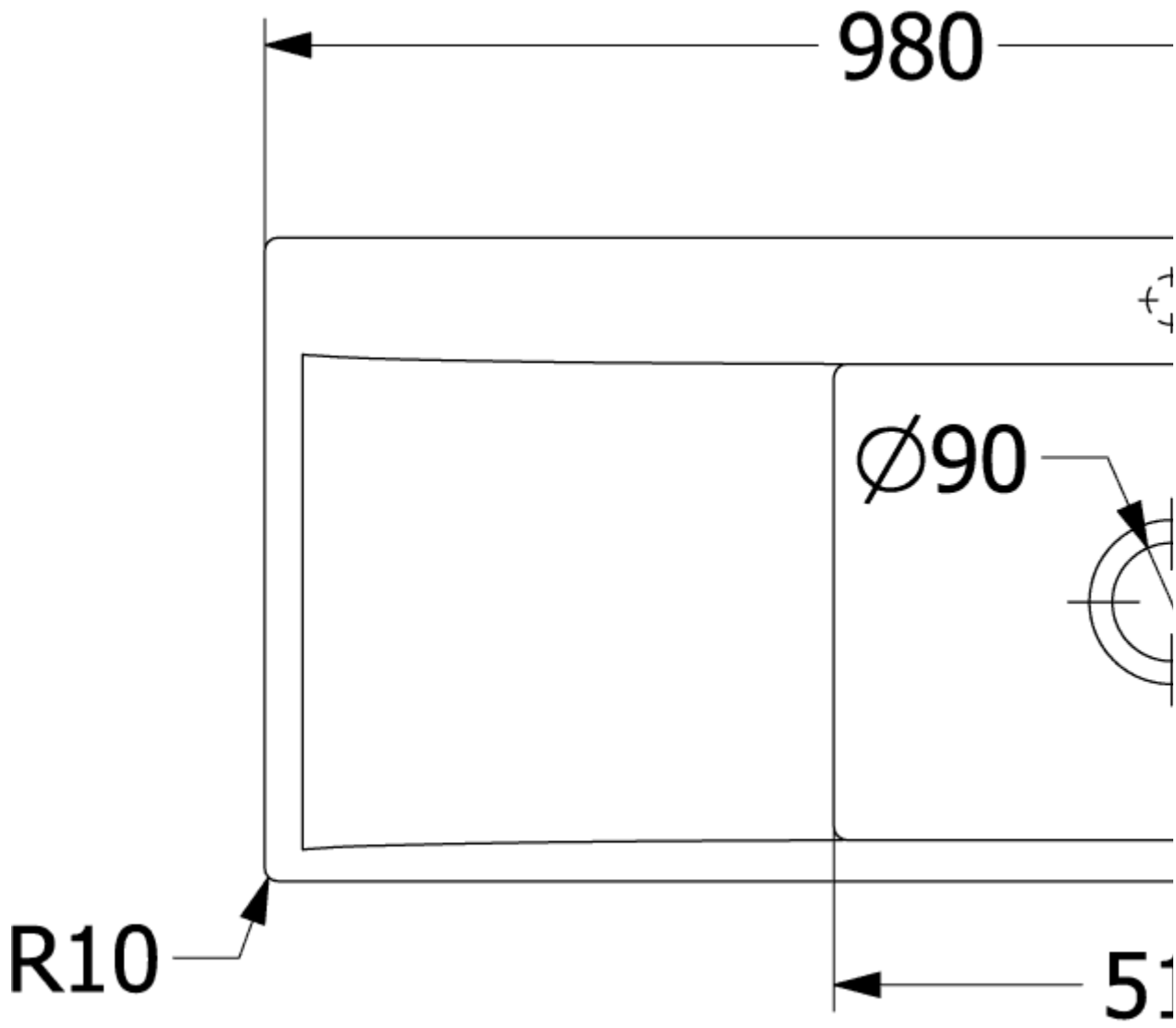
980
∅90
R10
51

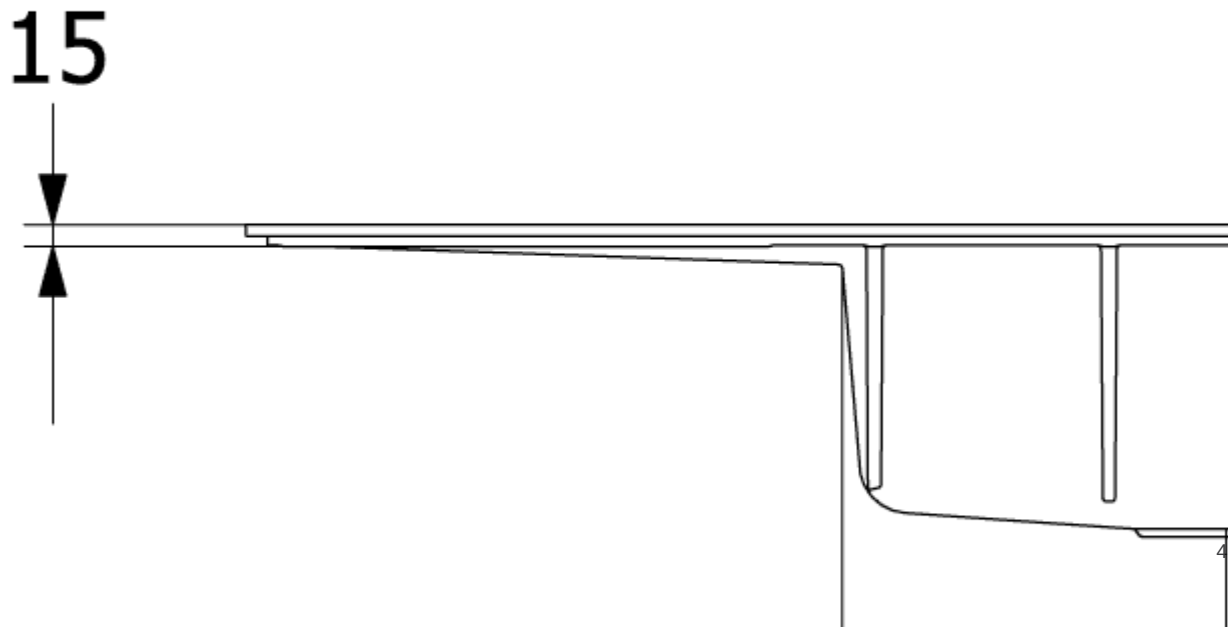
15
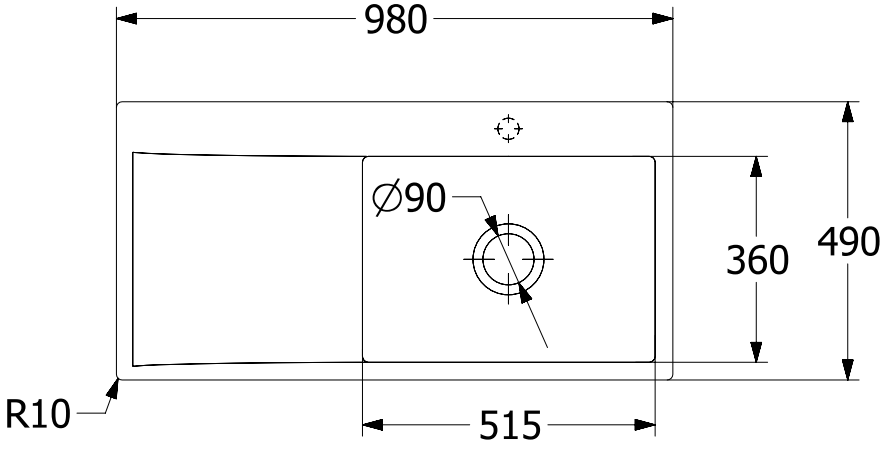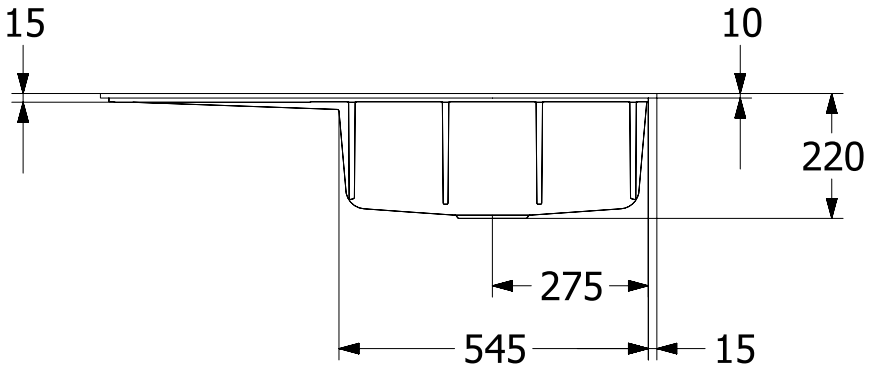
**33611FR1**