SUBWAY 60 XL BUILT-IN SINK RECTANGLE

PRODUCT INFORMATION

Article title	Villeroy & Boch Subway 60 XL Built-in sink, included Waste system hand-operated
Article number	671801H9
Assembly / Assembly type	surface-mounted installation
Assembly instructions	minimum unit width: 60 cm
Scope of delivery	1 x sink , 1 x basket strainer waste
Interior depth	200
Collection	Subway 60 XL
Position of main bowl	Basin on left
Function of the drain fitting	basket strainer waste

TECHNICAL DRAWINGS

671801H9

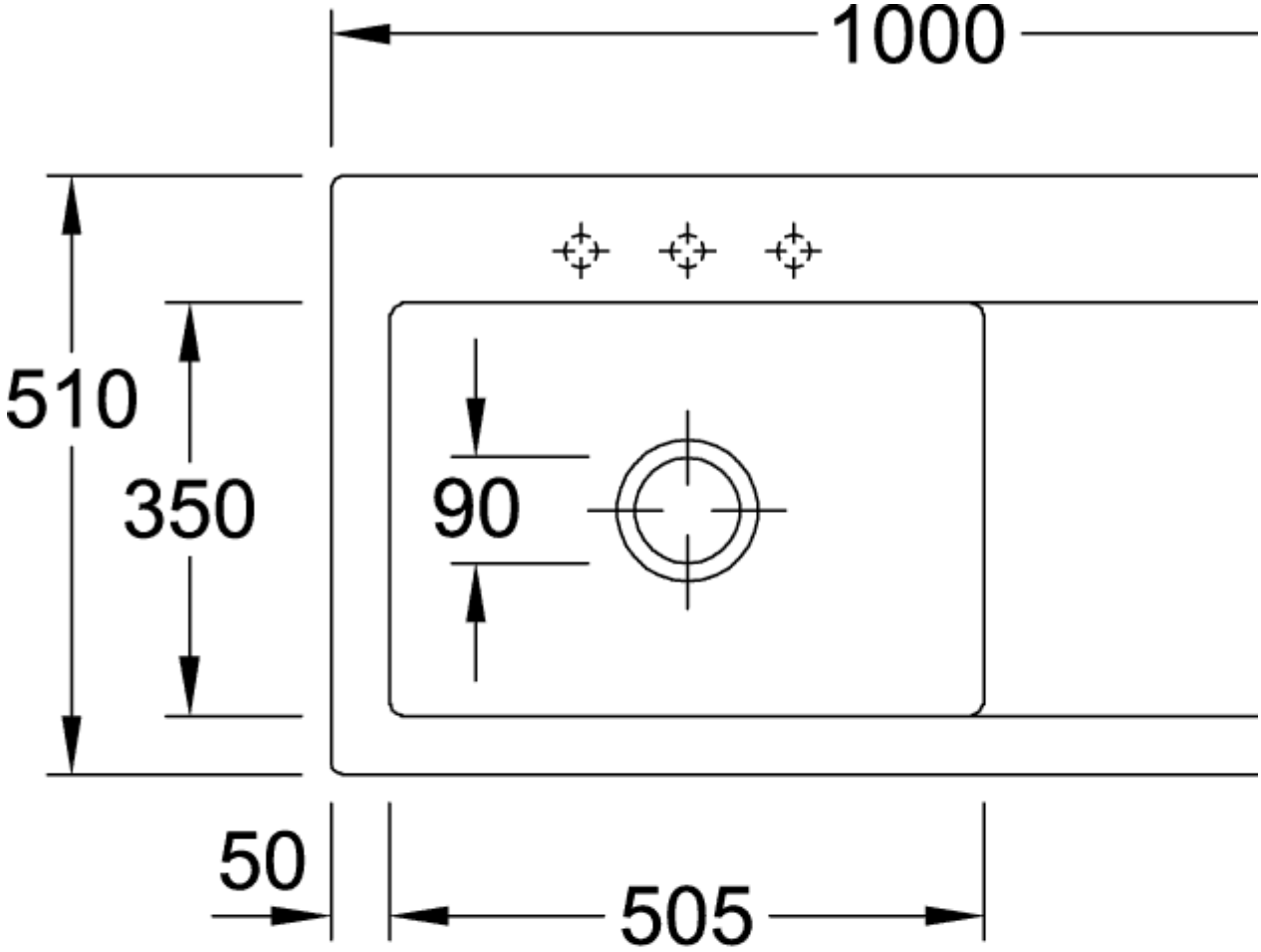

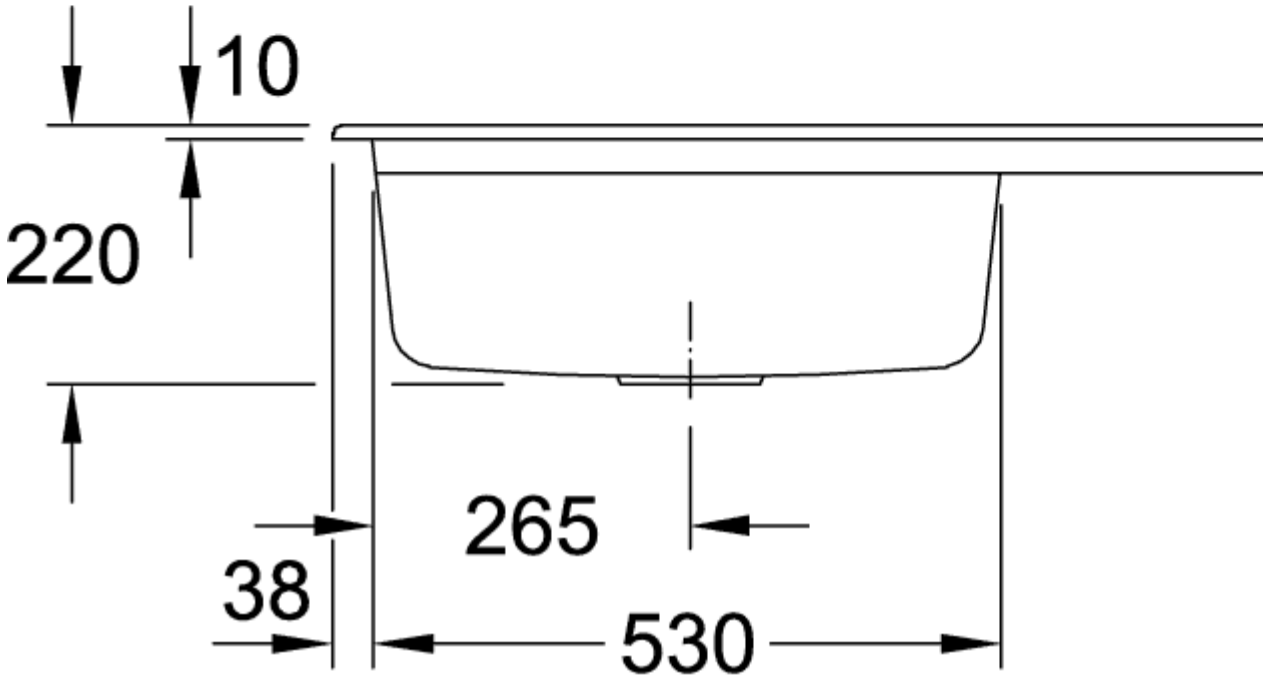
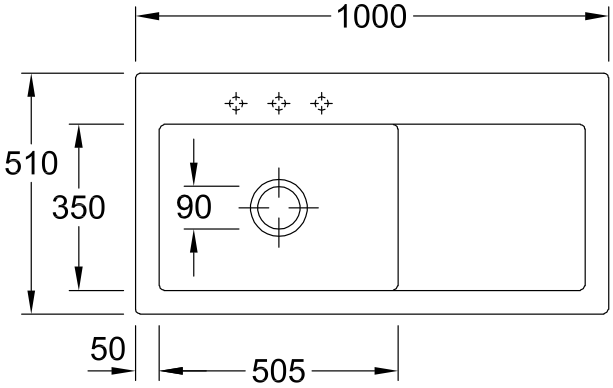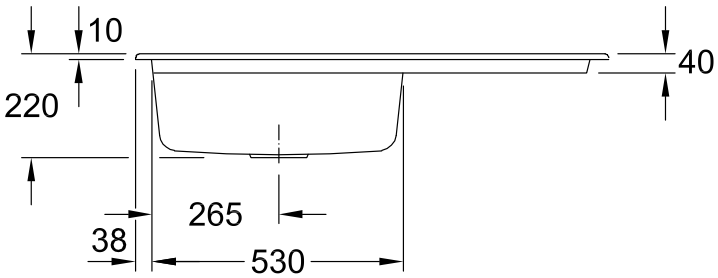
671801H9