CONDOR 50 BUILT-IN SINK RECTANGLE

PRODUCT INFORMATION

Article title	Villeroy & Boch Condor 50 Built-in sink, included Strainer bowl, Waste system hand-operated, Espresso glossy
Article number	673201KS
Assembly / Assembly type	surface-mounted installation
Assembly instructions	minimum unit width: 50 cm
Scope of delivery	1 x sink , 1 x basket strainer waste
Interior depth	175
Collection	Condor 50
Colour name	Espresso glossy
Position of main bowl	Basin, reversible
Function of the drain fitting	basket strainer waste

TECHNICAL DRAWINGS

673201KS

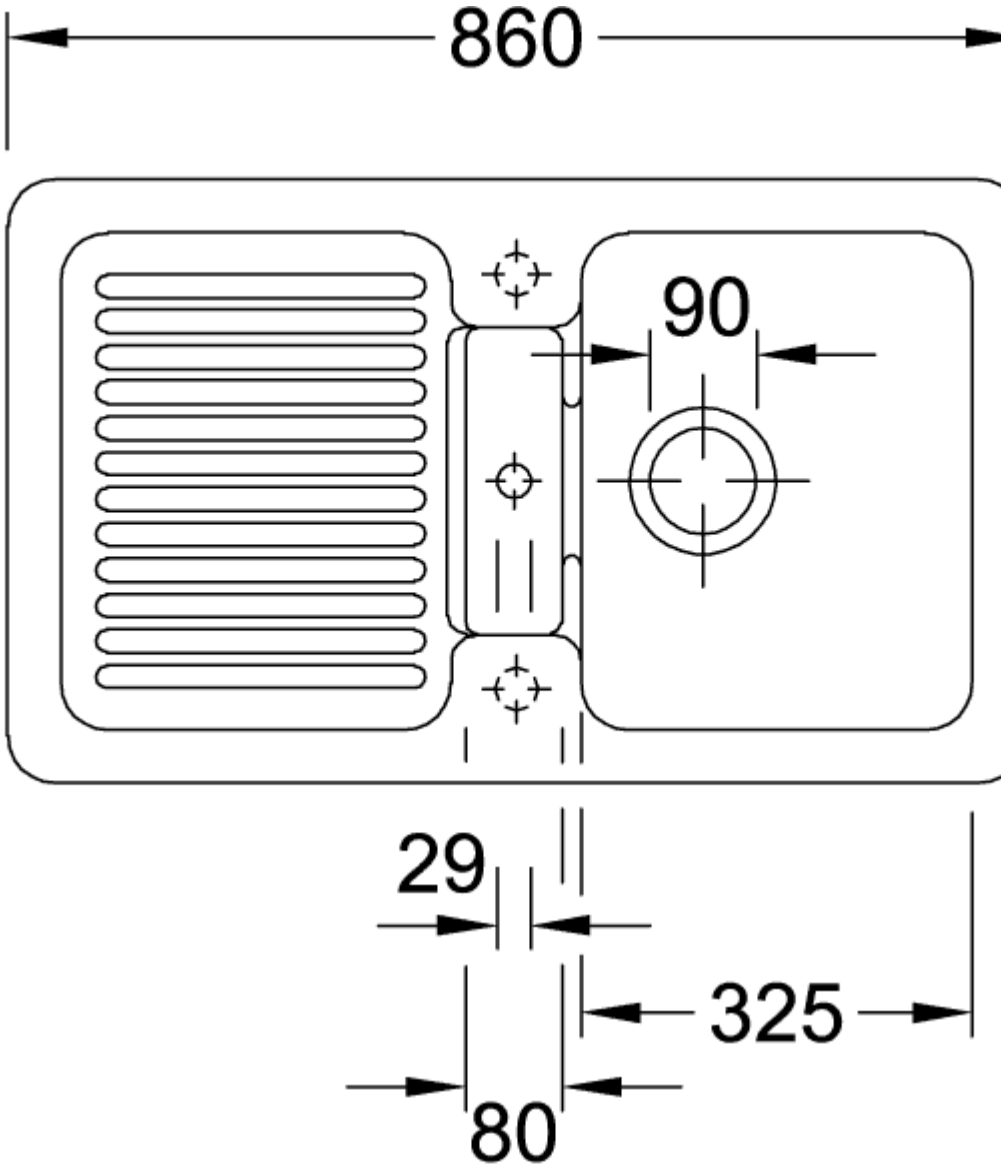
860
90
29
325
80

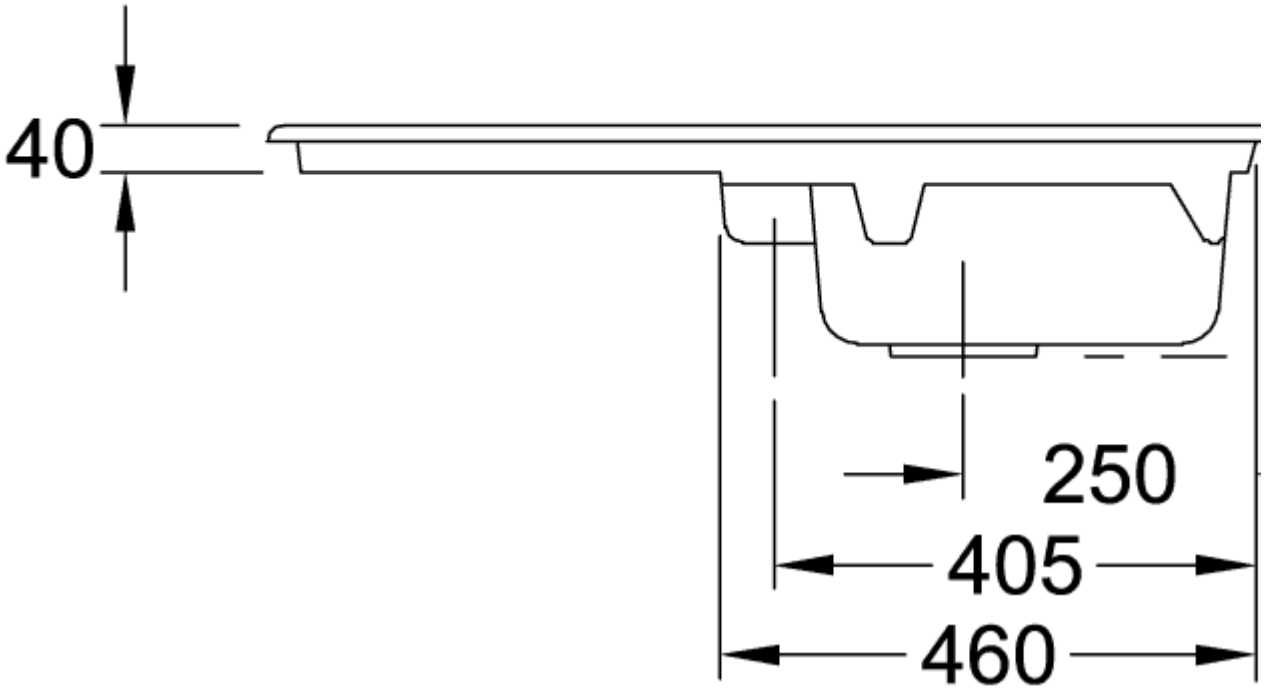
40
250
405
460
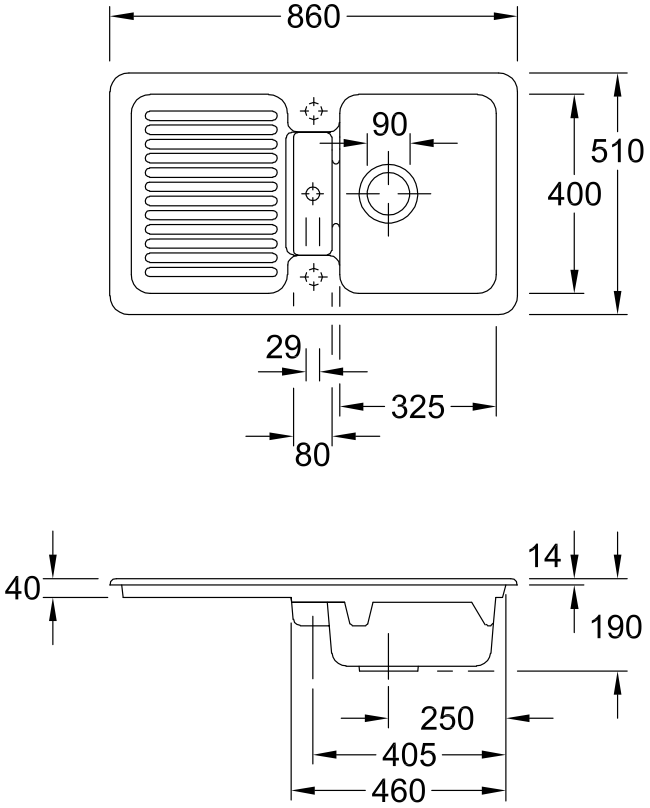
673201KS