CONDOR 60 BUILT-IN SINK RECTANGLE

PRODUCT INFORMATION

Article title	Villeroy & Boch Condor 60 Built-in sink, included Strainer bowl, Waste system pop-up, Espresso glossy
Article number	675902KS
Assembly / Assembly type	surface-mounted installation
Assembly instructions	minimum unit width: 60 cm
Scope of delivery	1 x sink , 1 x pop-up waste system 1 x cover cap, round
Interior depth	180
Collection	Condor 60
Colour name	Espresso glossy
Position of main bowl	Basin, reversible
Function of the drain fitting	pop-up waste system

TECHNICAL DRAWINGS

675902KS

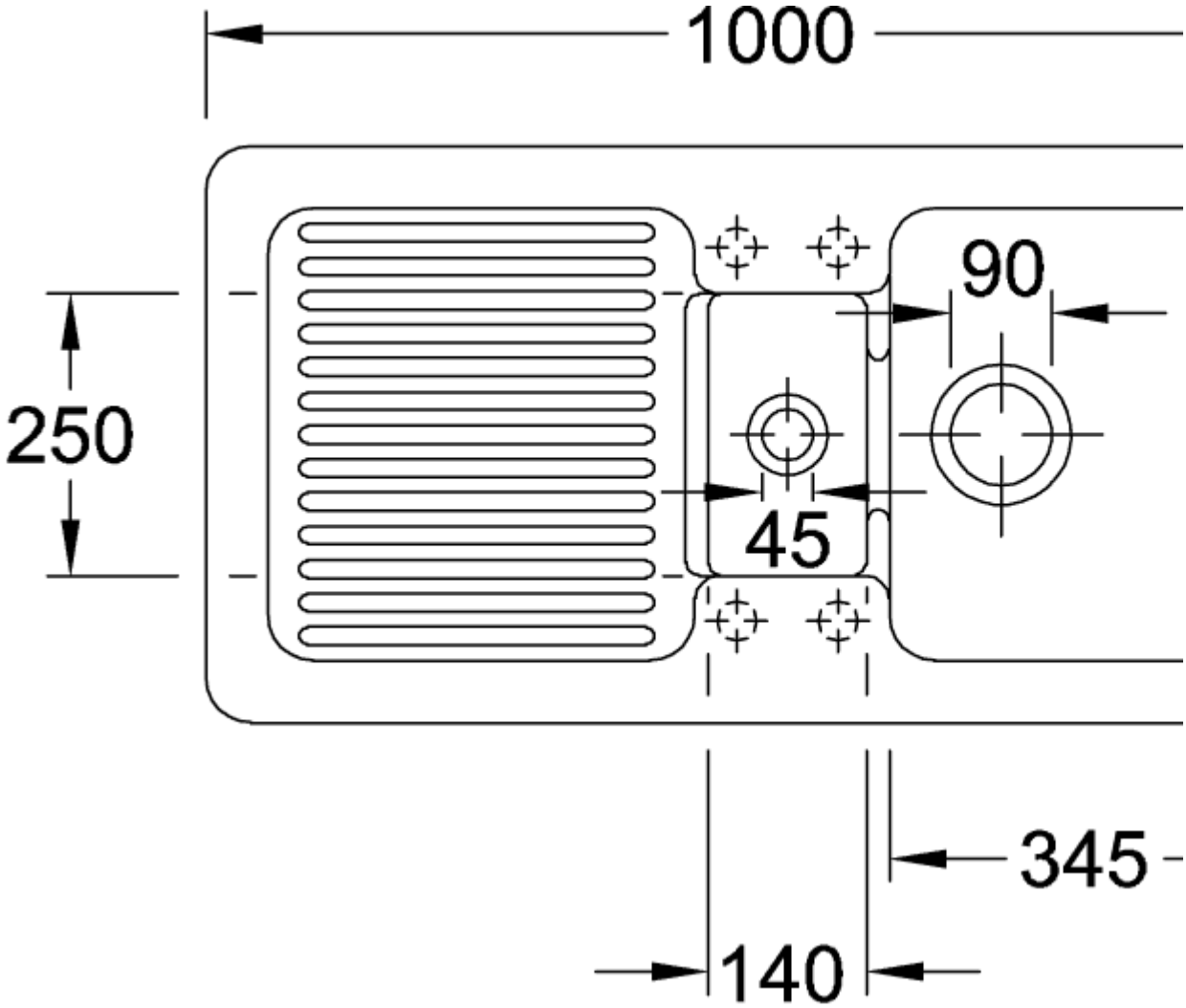
1000
90
250
45
345
140

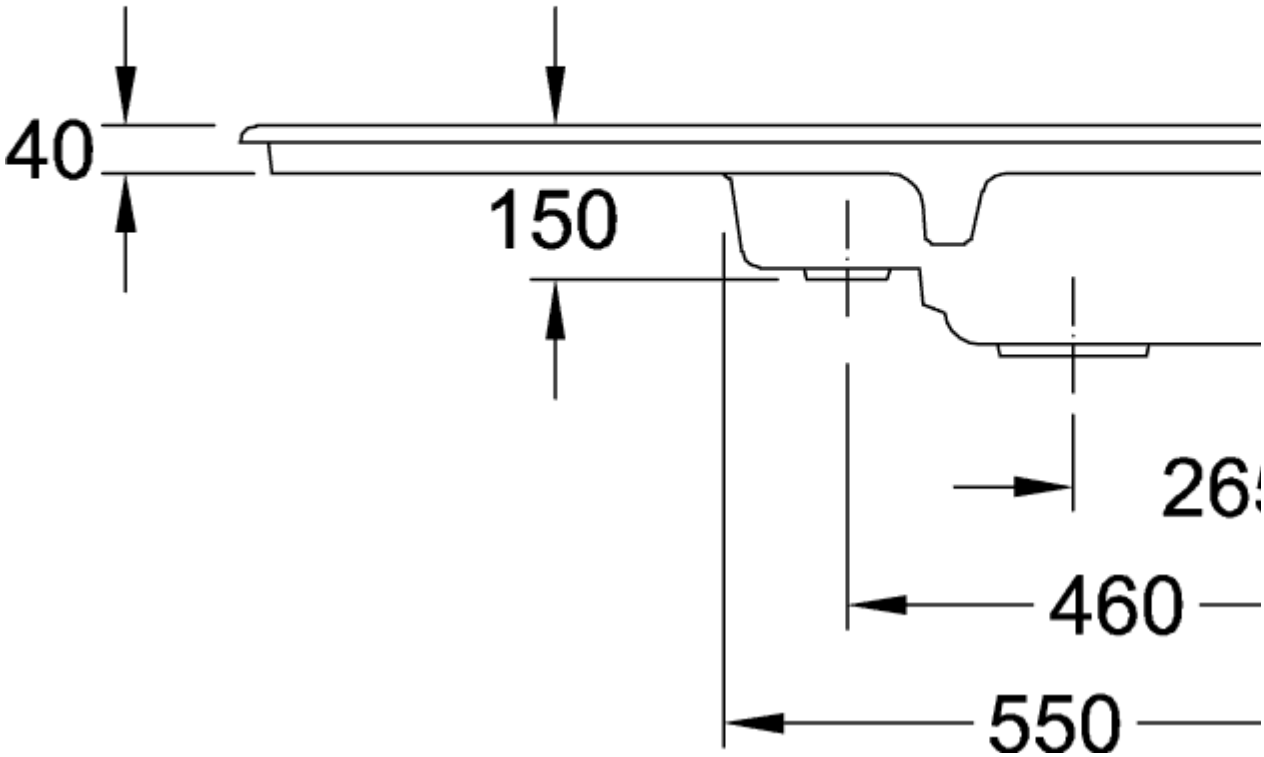
40
150
460
550
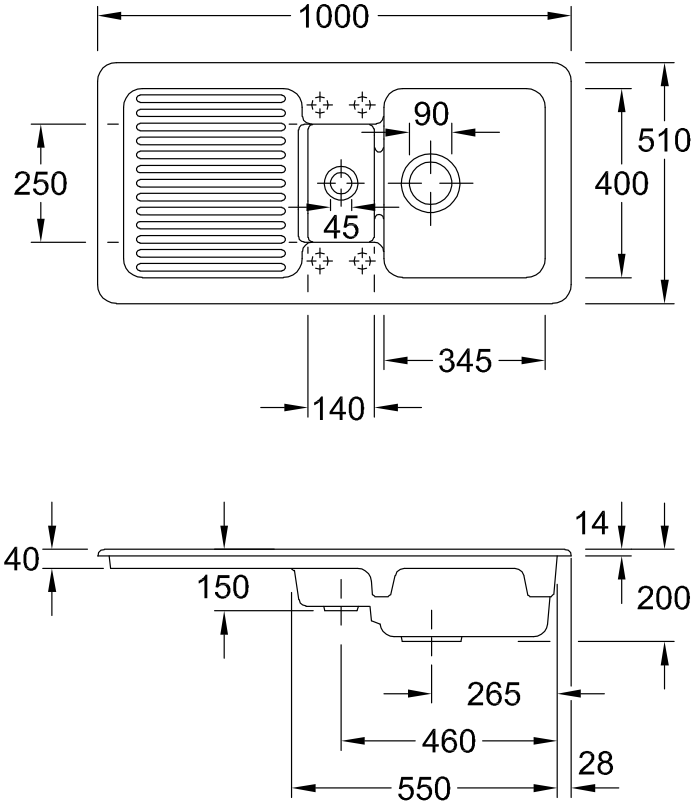
675902KS