SUBWAY 50 BUILT-IN SINK RECTANGLE

PRODUCT INFORMATION

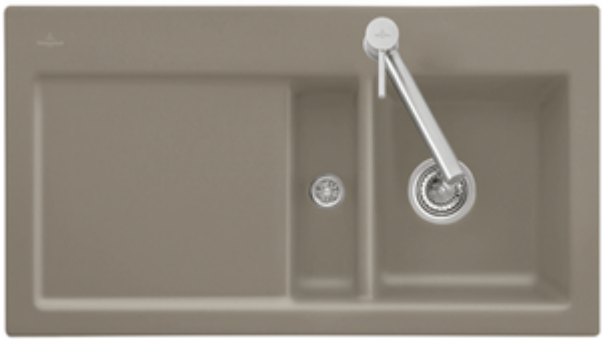

Article title	Villeroy & Boch Subway 50 Built-in sink, included Waste system hand-operated, Espresso glossy
Article number	677301KS
Assembly / Assembly type	surface-mounted installation
Assembly instructions	minimum unit width: 50 cm
Scope of delivery	1 x sink , 1 x basket strainer waste
Collection	Subway 50
Colour name	Espresso glossy
Position of main bowl	Basin on left
Function of the drain fitting	basket strainer waste

TECHNICAL DRAWINGS

677301KS

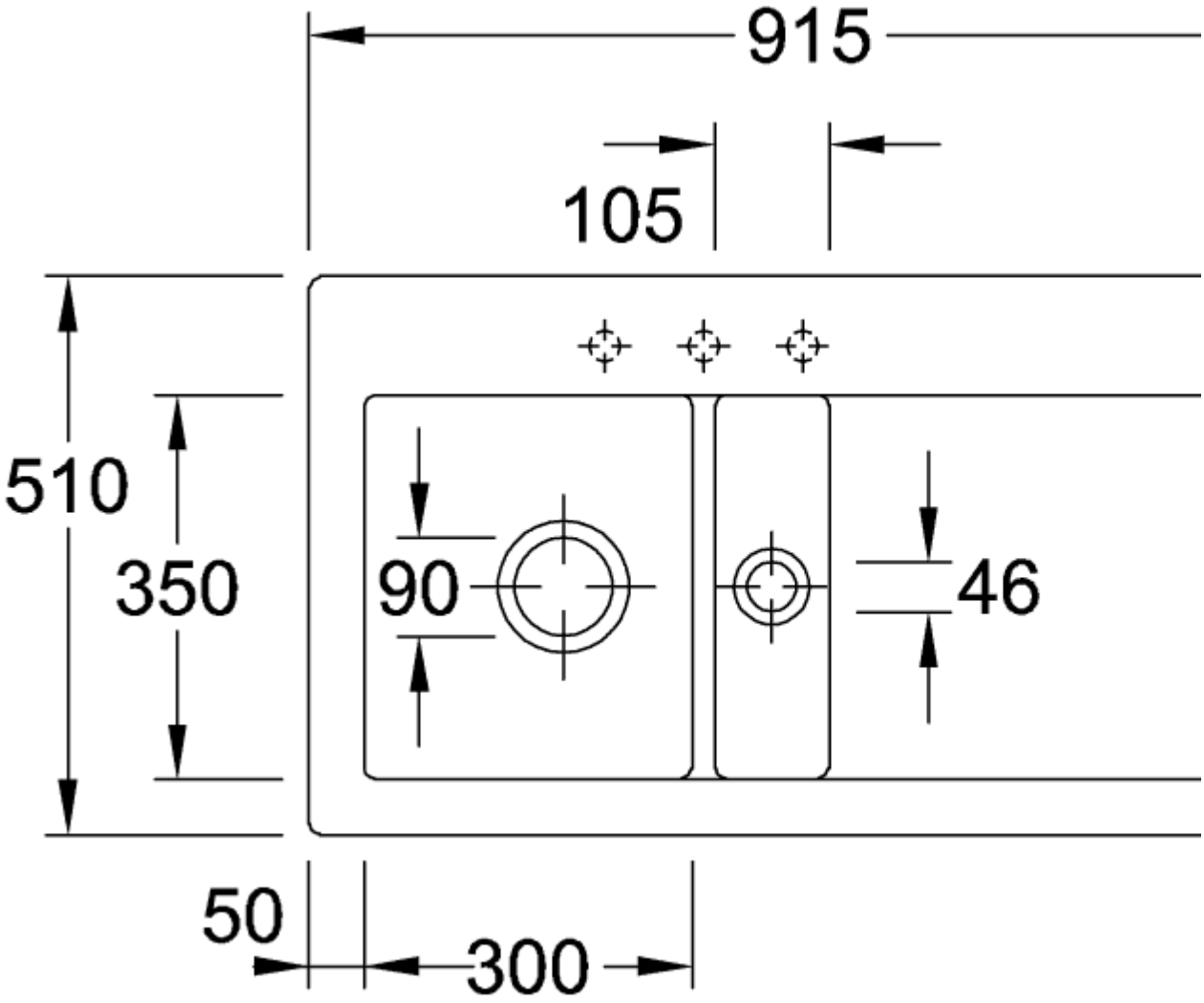
915
105
510
350
90
46
50
300

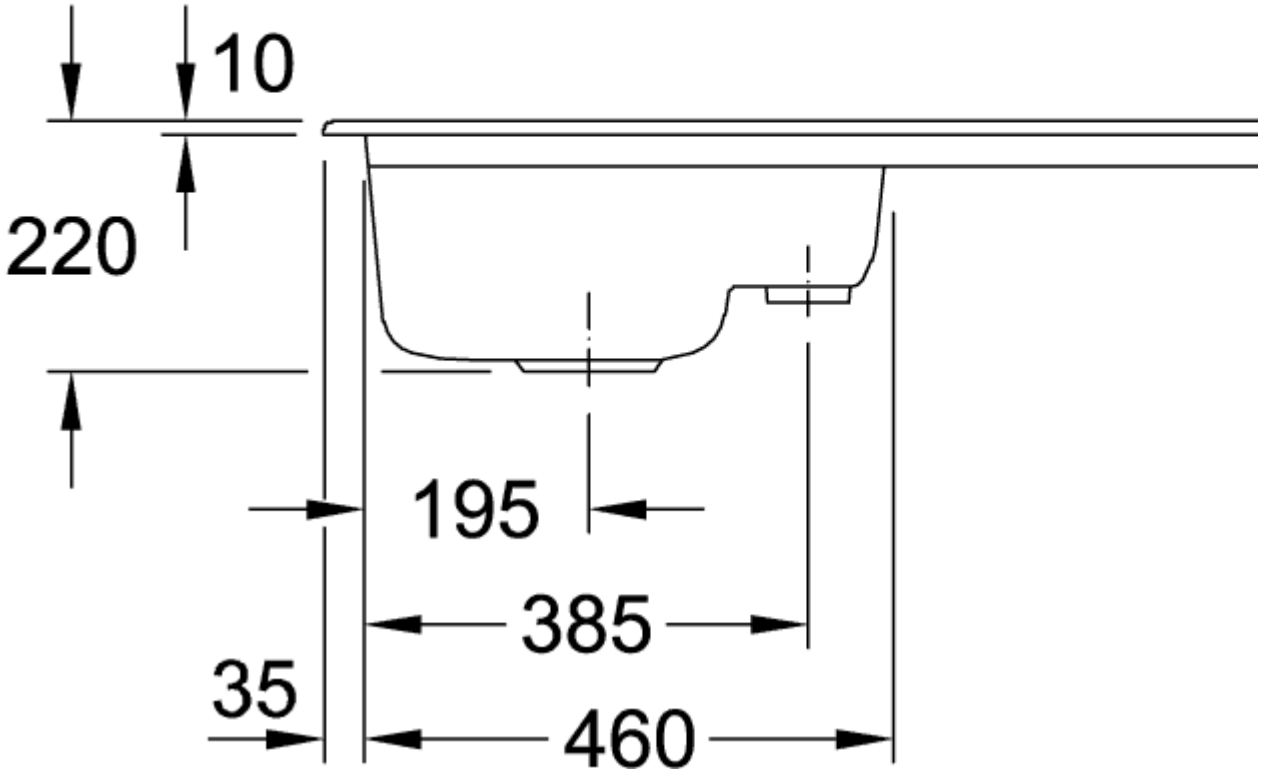
10
220
195
385
35
460
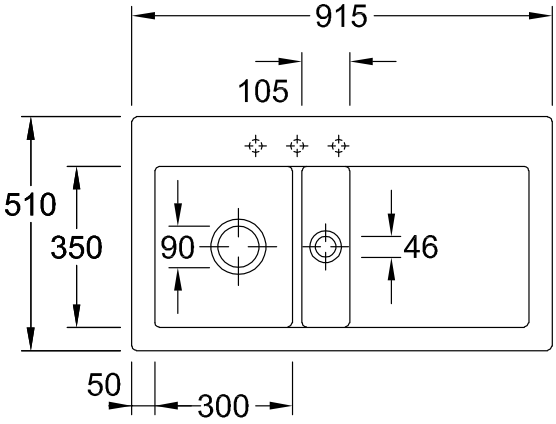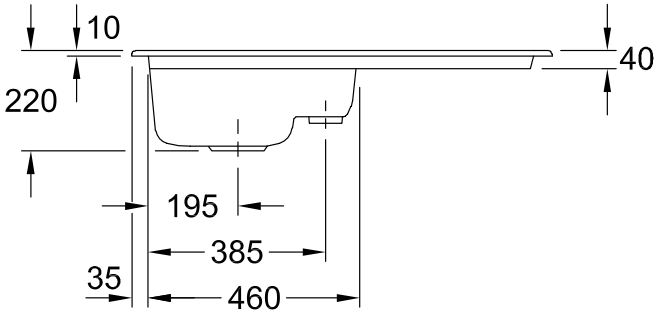
677301KS