SUBWAY STYLE 60 FLAT FLUSH-MOUNTED SINK RECTANGLE

PRODUCT INFORMATION

Article title	Villeroy & Boch Subway Style 60 Flat Flush-mounted sink, included Waste system pop-up, of Ceramic, 980 x 490 mm, White Alpin CeramicPlus
Article number	33612FR1
Assembly / Assembly type	flush-fitting installation
Assembly instructions	minimum unit width: 60 cm
Scope of delivery	1 x sink , 1 x pop-up waste system 1 x cover cap, round
Length in mm	490
Width in mm	980
Height in mm	220
Interior depth	200
Collection	Subway Style 60 Flat
Material	Ceramic
Colour name	White Alpin CeramicPlus
Other material	Grate: Stainless steel Valve: Stainless steel
Position of main bowl	Basin on right
Function of the drain fitting	pop-up waste system
Colour designation	White Alpin
Other colour designations	Grate: Chrome, Valve: Chrome

TECHNICAL DRAWINGS

33612FR1

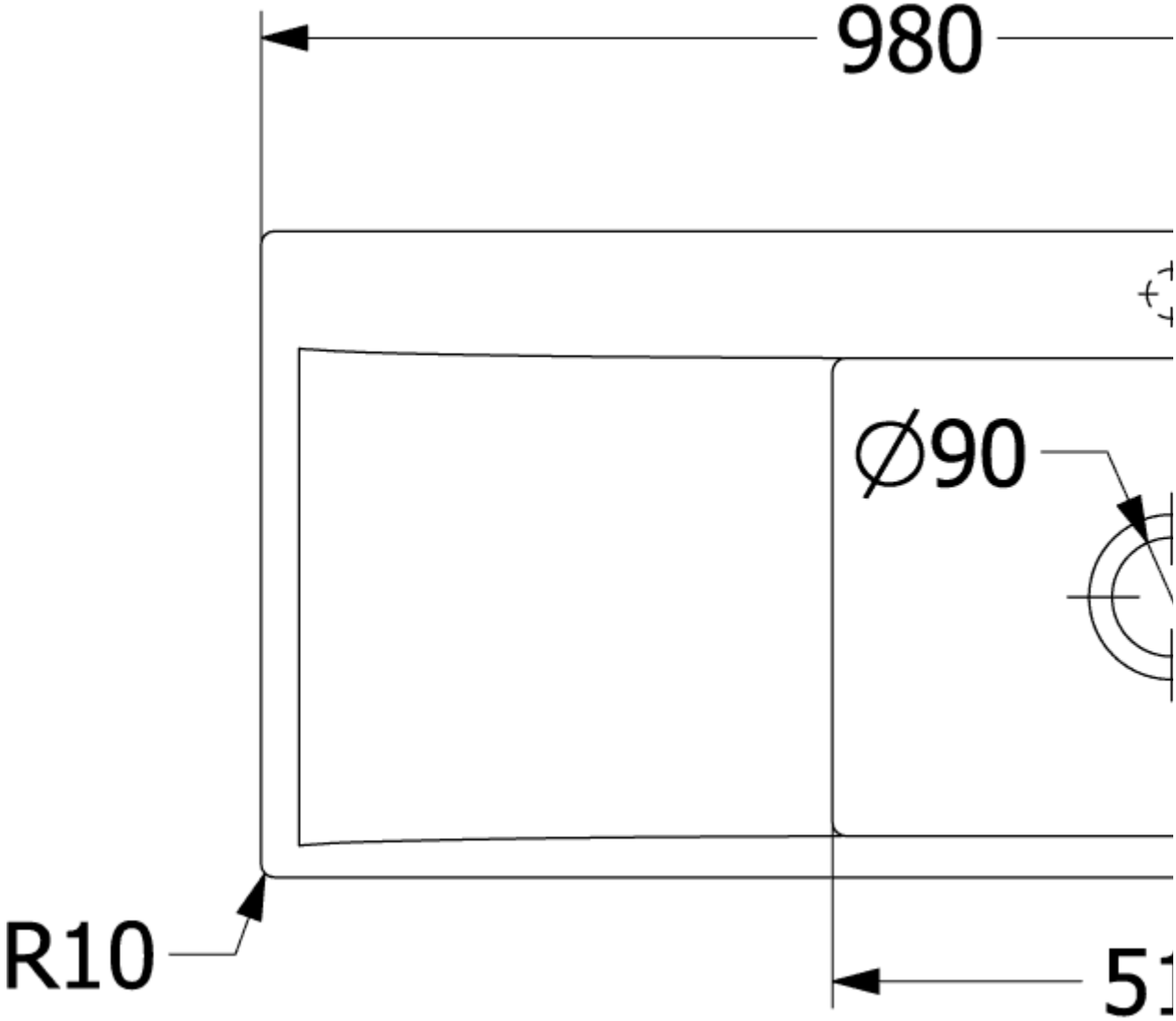
980
Ø90
R10
51

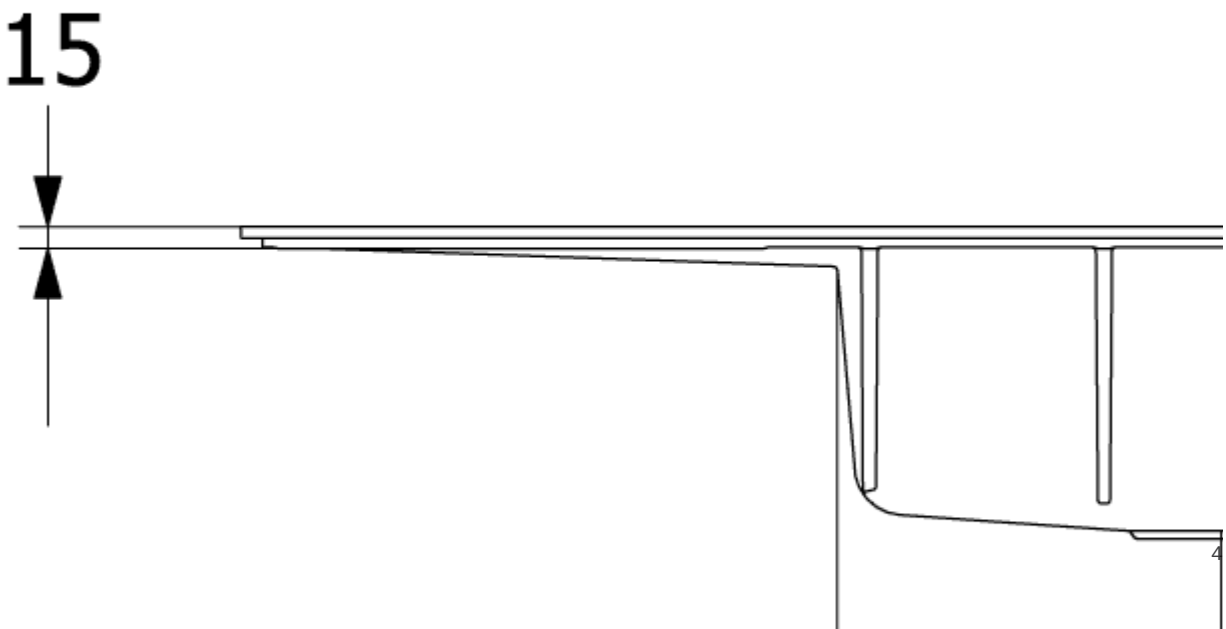
15
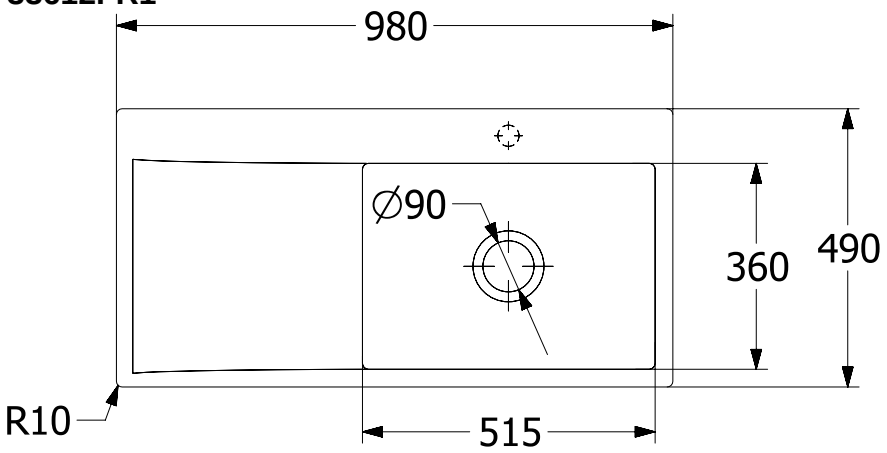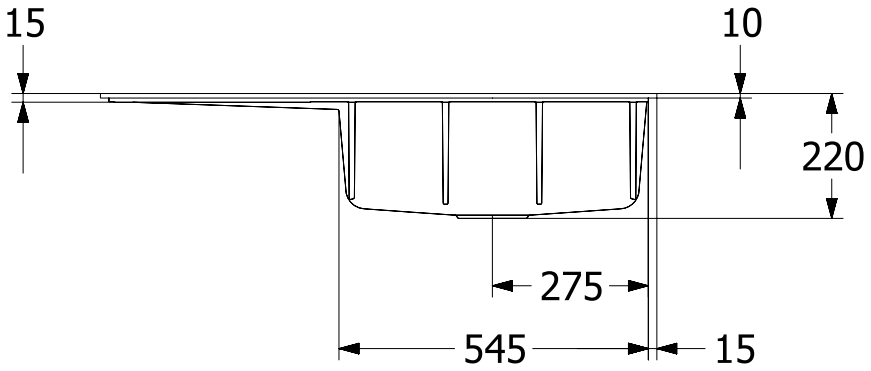
33612FR1