# FARMHOUSE 60 X SINGLE-BOWL SINK RECTANGLE

## PRODUCT INFORMATION

| | |
|---|---|
| Article title | Villeroy & Boch Farmhouse 60 X Single-bowl sink, included Waste system pop-up, of Ceramic, 595 x 500 mm, White Alpin CeramicPlus |
| Article number | 636002R1 |
| Assembly / Assembly type | surface-mounted installation |
| Assembly instructions | minimum unit width: 60 cm, The rear is unglazed and the projection is 50 cm. Overhang varies depending on the furniture manufacturer.\|installation in natural stone / artificial stone countertops recommended |
| Scope of delivery | 1 x sink , 1 x pop-up waste system 1 x cover cap, round |
| Length in mm | 500 |
| Width in mm | 595 |
| Height in mm | 200 |
| Interior depth | 180 |
| Collection | Farmhouse 60 X |
| Material | Ceramic |
| Colour name | White Alpin CeramicPlus |
| Other material | Grate: Stainless steel Valve: Stainless steel |
| Position of main bowl | Basin centred |
| Function of the drain fitting | pop-up waste system |
| Colour designation | White Alpin |
| Other colour designations | Grate: Chrome, Valve: Chrome |

# TECHNICAL DRAWINGS

**636002R1**

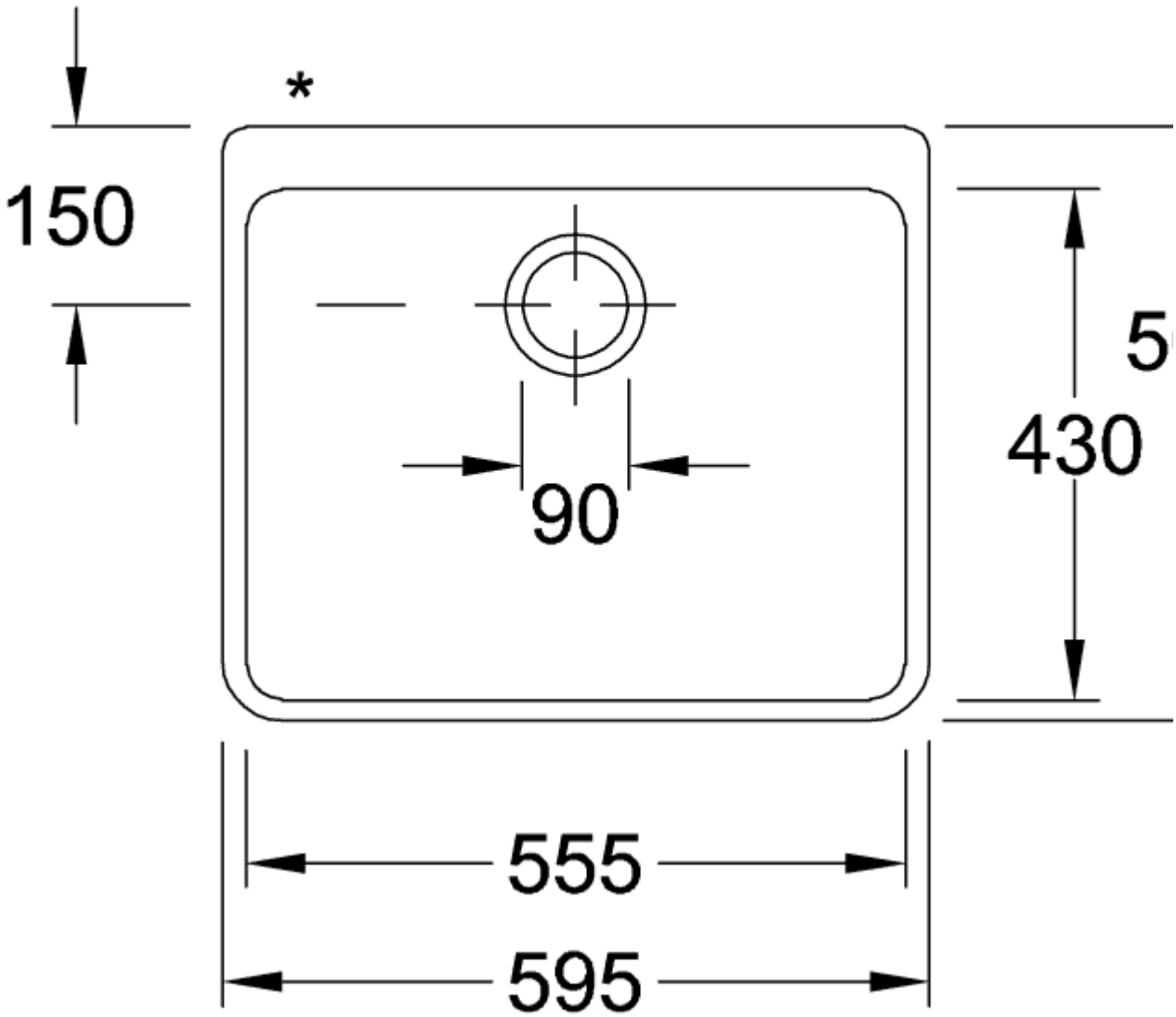
*
150
5
430
90
555
595

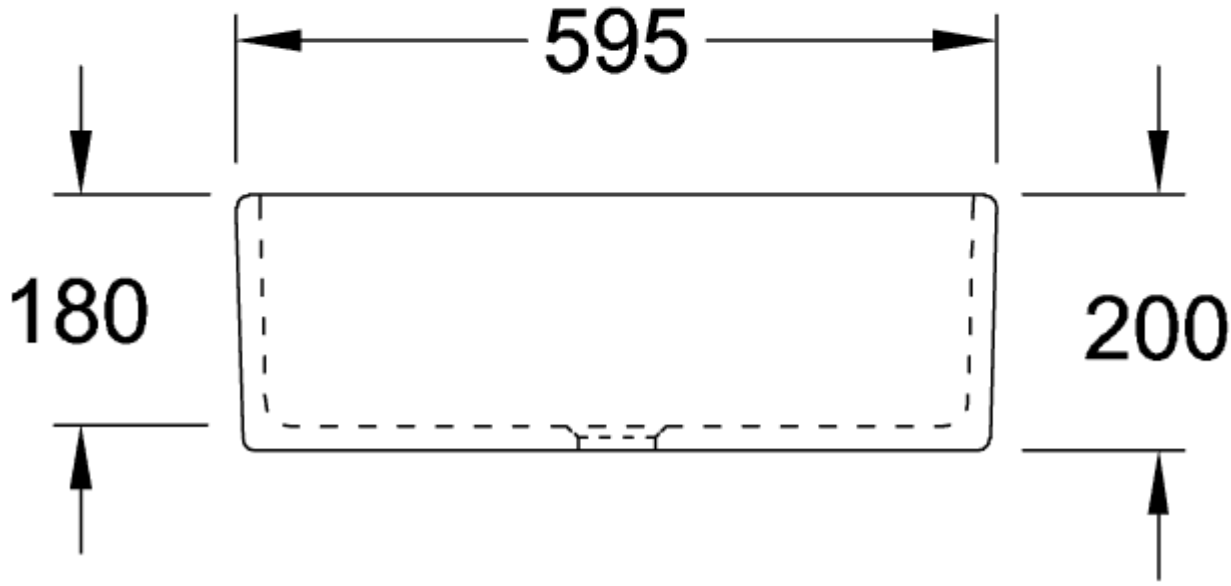
595
180
200
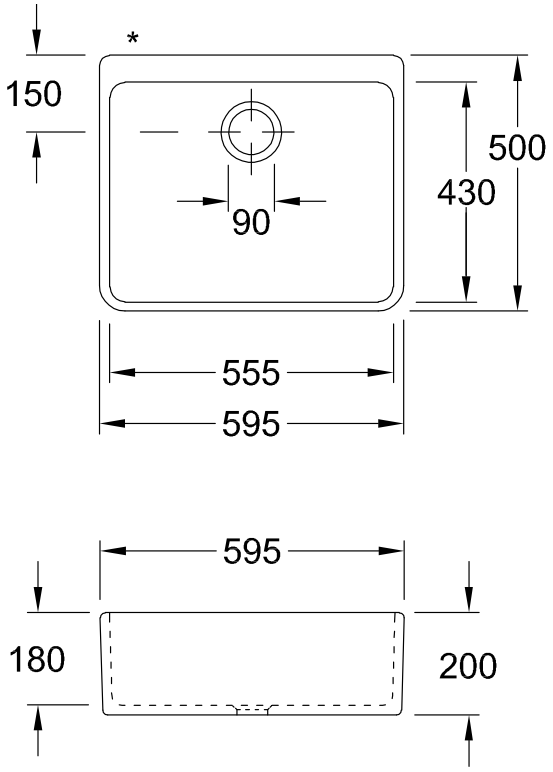
**636002R1**