CONDOR 50 BUILT-IN SINK RECTANGLE

PRODUCT INFORMATION

Article title	Villeroy & Boch Condor 50 Built-in sink, included Strainer bowl, Waste system pop-up, of Ceramic, 860 x 510 mm, Steam CeramicPlus
Article number	673202SM
Assembly / Assembly type	surface-mounted installation
Assembly instructions	minimum unit width: 50 cm
Scope of delivery	1 x sink , 1 x pop-up waste system 1 x cover cap, round
Length in mm	510
Width in mm	860
Height in mm	190
Interior depth	175
Collection	Condor 50
Material	Ceramic
Colour name	Steam CeramicPlus
Other material	Grate: Stainless steel Valve: Stainless steel
Position of main bowl	Basin, reversible
Function of the drain fitting	pop-up waste system
Colour designation	Steam
Other colour designations	Grate: Chrome, Valve: Chrome

TECHNICAL DRAWINGS

673202SM

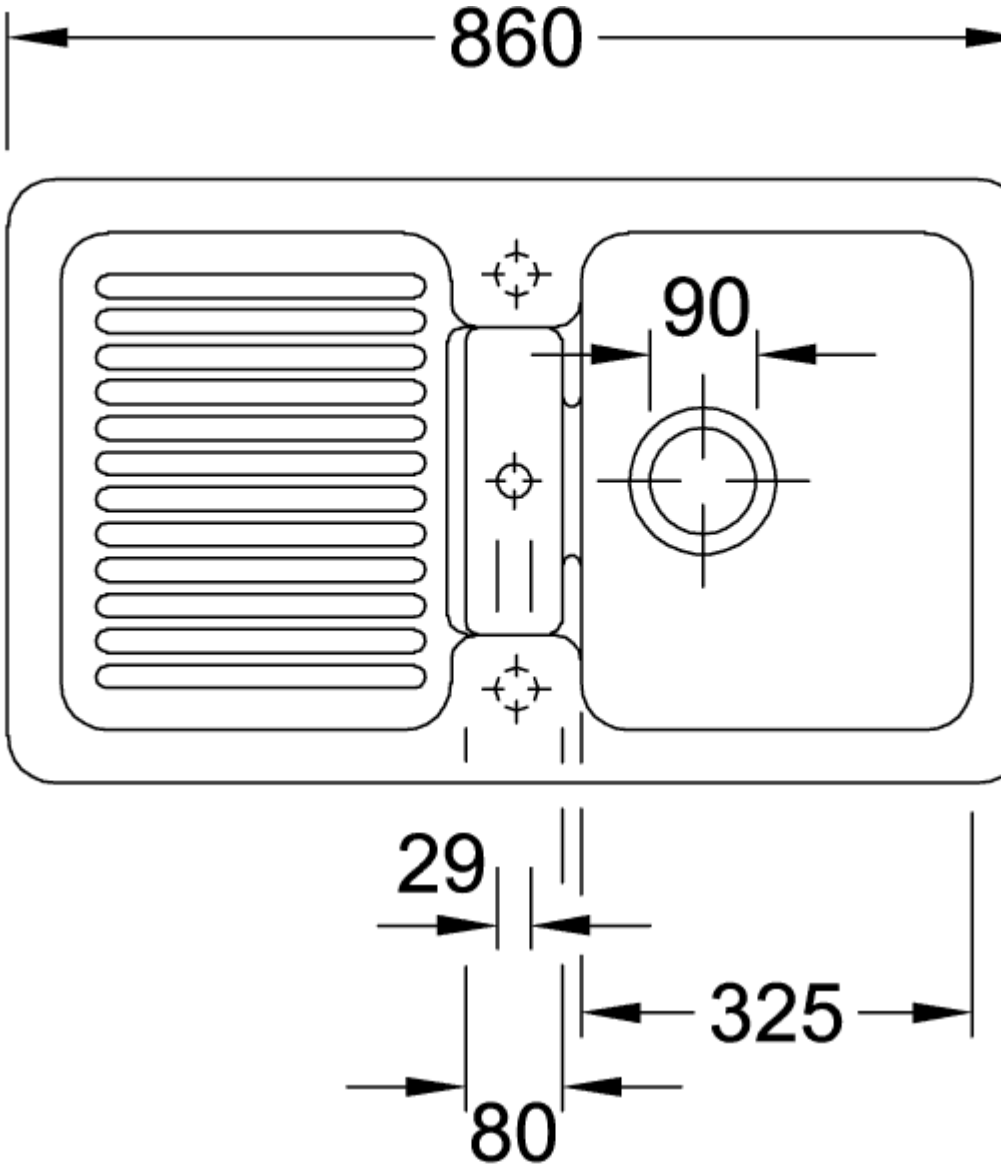
860
90
29
325
80

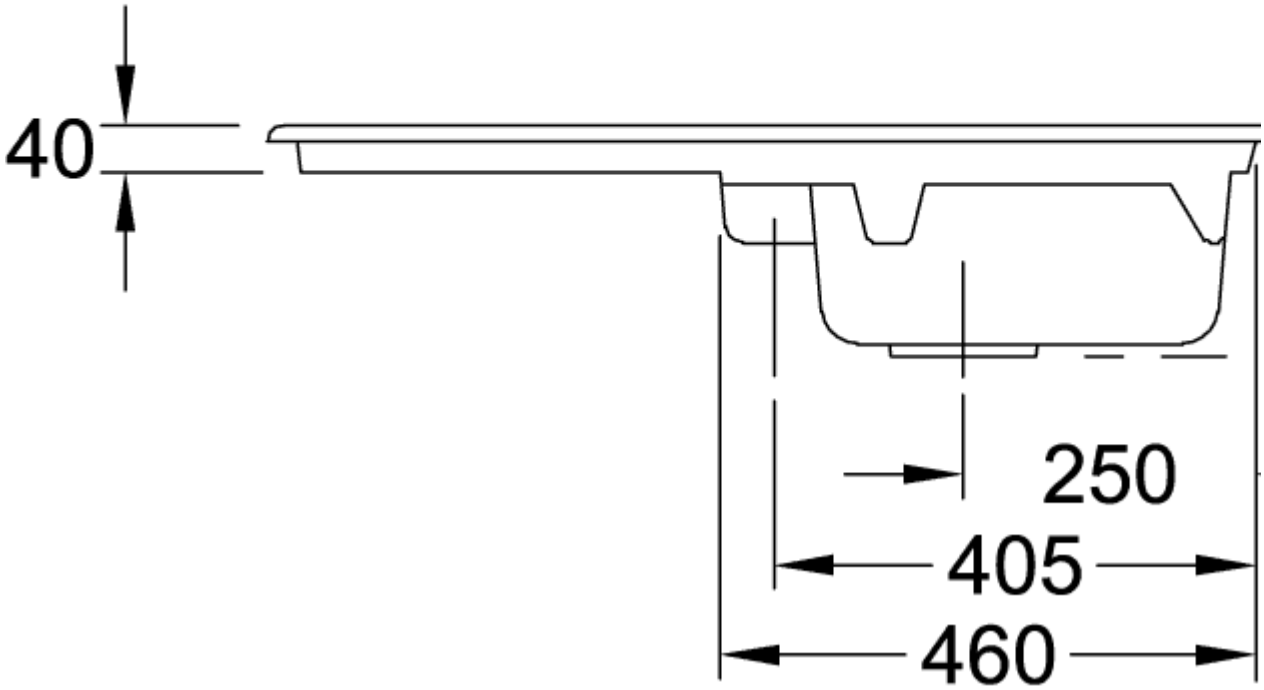
40
250
405
460
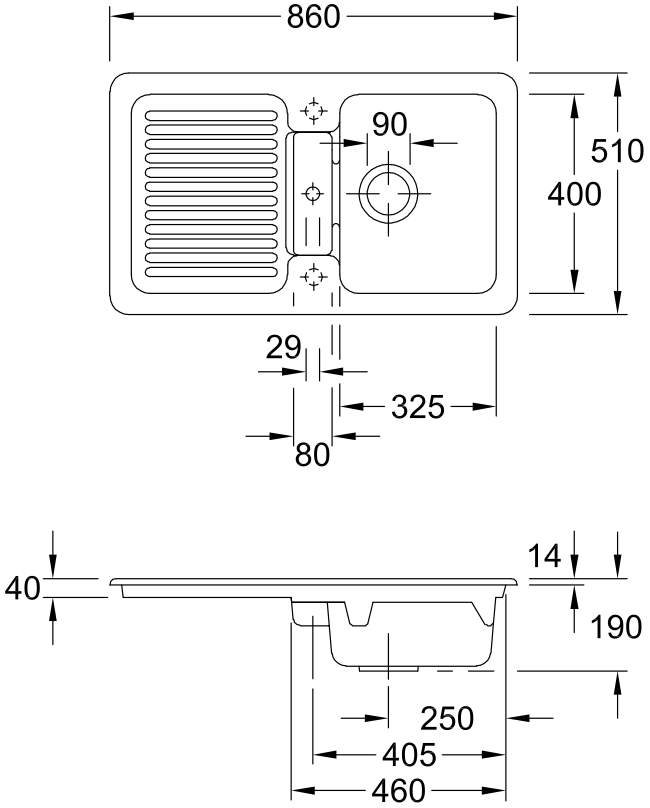
673202SM